bürkert
FLUID CONTROL SYSTEMS

# Mass Flow Meter (MFM) for Gases

- Direct flow measurement by MEMS- Technology for nominal flow rates from 10 $ml_N$/min to 80 $l_N$/min ($N_2$)
- High accuracy
- Short response time
- Compact design and digital communication

Type 8703 can be combined with…

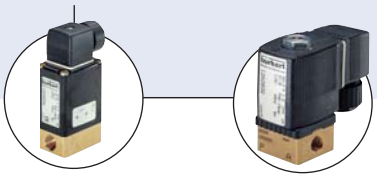

**Type 0330**
3/2 or 2/2-way valve

**Type 6013**
2/2-way valve

Mass flow meter are used in process technology for the direct measurement of the mass flow of gases. In case of volumetric flow meters, it is necessary to measure the temperature and the pressure or the density, because gases change their density or rather their volume depending on the pressure. The measurement of the mass flow, on the other hand, is independent of the pressure and temperature.
The digital mass flow meter type 8703 uses a sensor on silicon chip basis located directly in contact with the gas. Due to the fact that the sensor is directly in the bypass channel a very fast response time of the MFM is reached. The actual flow is given over RS485-communication. Type 8703 can optionally be calibrated for two different gases, the user is able to switch between these two gases. This instrument communicates with master devices digitally, no further A/D conversions needed.

| Technical Data | | | |
|---|---|---|---|
| **Nominal flow range**[1] ($Q_{nominal}$) | 10 $ml_N$/min [2] to 80 $l_N$/min ($N_2$), see table on p. 2 | **Power supply** | 24V DC |
| **Turn-down ratio** | 1:50, higher turn-down ratio on request | **Voltage tolerance** | ±10% |
| **Operating gas** | Neutral, non-contaminated gases, on request | **Residual ripple** | < 2% |
| **Calibration gas** | Operating gas or air with conversion factor | **Power consumption** | Max. 11.5 W (depending on control valve used) |
| **Max. operating pressure** (Inlet pressure) | 10 bar (145 psi) depending on the orifice of the valve | **Communication** | Digital via RS485 (half-duplex or full-duplex), RS422, RS232 via adapter |
| **Gas temperature** | -10 to +70°C (-10 to +60°C with oxygen) | **Protection class** | IP40 |
| **Ambient temperature** | -10 to +50°C[3] | **Dimensions [mm]** | see drawings p. 5-6 |
| **Accuracy** | ±0.8% o.R. ±0.3% F.S. (after 1 min. warm up time) | **Total weight** | ca. 500 g (aluminium body) |
| **Repeatability** | ±0.1% F.S. | **Installation** | horizontal or vertical |
| **Response time ($t_{95\%}$)** | < 300 ms | **Light emitting diodes** (default functions, other functions programmable) | Indication for power, limit and error |
| **Materials**<br>Body<br>Housing<br>Seals | <br>Aluminium or stainless steel<br>Metal<br>FKM, EPDM | **Binary inputs** (default functions, other functions programmable) | Two<br>1. Start Autotune<br>2. not assigned |
| **Port connection** | NPT 1/4, G 1/4, screw-in fitting or sub-base, others on request | **Binary output** (default functions, other functions programmable) | One relay output for:<br>1. Limit (setpoint not reached)<br>Max. Load: 25V, 1A, 25VA |
| **Electr. connection** | Plug D-Sub 9-pin | | |

[1] The nominal flow value is the max. flow value calibrated which can be controlled. The nominal flow range defines the range of nominal flow rates (full scale values) possible.
[2] Index N: Flow rates referred to 1.013 bar and 0° C.
Alternatively Index S which refers to 1.013 bar and 20° C.
[3] Higher temperature on request.

## По вопросам продаж и поддержки обращайтесь:

Архангельск +7 (8182) 45-71-35
Астана +7 (7172) 69-68-15
Астрахань +7 (8512) 99-46-80
Барнаул +7 (3852) 37-96-76
Белгород +7 (4722) 20-58-80
Брянск +7 (4832) 32-17-25
Владивосток +7 (4232) 49-26-85
Владимир +7 (4922) 49-51-33
Волгоград +7 (8442) 45-94-42
Воронеж +7 (4732) 12-26-70
Екатеринбург +7 (343) 302-14-75
Иваново +7 (4932) 70-02-95
Ижевск +7 (3412) 20-90-75
Иркутск +7 (3952) 56-24-09
Йошкар-Ола +7 (8362) 38-66-61
Казань +7 (843) 207-19-05
Калининград +7 (4012) 72-21-36
Калуга +7 (4842) 33-35-03
Кемерово +7 (3842) 21-56-70
Киров +7 (8332) 20-58-70
Краснодар +7 (861) 238-86-59
Красноярск +7 (391) 989-82-67
Курск +7 (4712) 23-80-45
Липецк +7 (4742) 20-01-75
Магнитогорск +7 (3519) 51-02-81
Москва +7 (499) 404-24-72
Мурманск +7 (8152) 65-52-70
Наб.Челны +7 (8552) 91-01-32
Ниж.Новгород +7 (831) 200-34-65
Нижневартовск +7 (3466) 48-22-23
Нижнекамск +7 (8555) 24-47-85
Новороссийск +7 (8617) 30-82-64
Новосибирск +7 (383) 235-95-48
Омск +7 (381) 299-16-70
Орел +7 (4862) 22-23-86
Оренбург +7 (3532) 48-64-35
Пенза +7 (8412) 23-52-98
Первоуральск +7 (3439) 26-01-18
Пермь +7 (342) 233-81-65
Ростов-на-Дону +7 (863) 309-14-65
Рязань +7 (4912) 77-61-95
Самара +7 (846) 219-28-25
Санкт-Петербург +7 (812) 660-57-09
Саранск +7 (8342) 22-95-16
Саратов +7 (845) 239-86-35
Смоленск +7 (4812) 51-55-32
Сочи +7 (862) 279-22-65
Ставрополь +7 (8652) 57-76-63
Сургут +7 (3462) 77-96-35
Сызрань +7 (8464) 33-50-64
Сыктывкар +7 (8212) 28-83-02
Тверь +7 (4822) 39-50-56
Томск +7 (3822) 48-95-05
Тула +7 (4872) 44-05-30
Тюмень +7 (3452) 56-94-75
Ульяновск +7 (8422) 42-51-95
Уфа +7 (347) 258-82-65
Хабаровск +7 (421) 292-95-69
Чебоксары +7 (8352) 28-50-89
Челябинск +7 (351) 277-89-65
Череповец +7 (8202) 49-07-18
Ярославль +7 (4852) 67-02-35

**сайт: burkert.pro-solution.ru | эл. почта: btk@pro-solution.ru**
**телефон: 8 800 511 88 70**

## Measurement principle

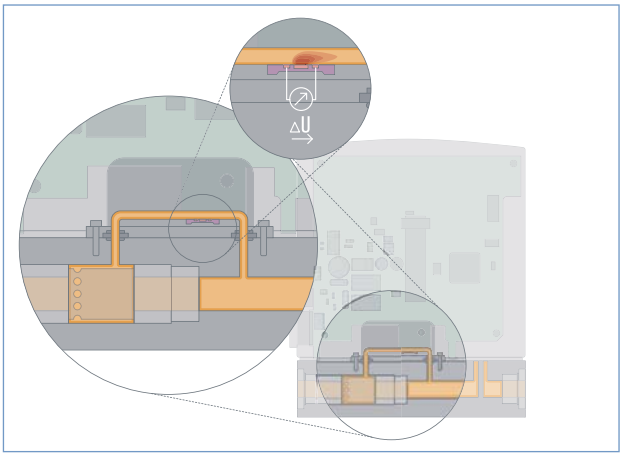


The actual flow rate is detected by a sensor. This operates according to a thermal principle which has the advantage of delivering the mass flow without any corrections for the required pressure or temperature.

A small part of the total gas stream is diverted into a small, specifically designed bypass channel, that ensures laminar flow conditions. The sensor element is a chip immersed into the wall of this channel. The chip, produced in MEMS technology, contains a heating resis-tor and two temperature sensors (thermopiles) which are arranged symmetrically upstream and downstream of the heater. The differential voltage of the thermopiles is a measure of the mass flow rate passing this bypass channel. The calibration procedure effectuates a unique assignment of the sensor signal to the total flow rate passing the device.

## Pressure Loss Diagram (ref. to air, with 250µm inlet filter)

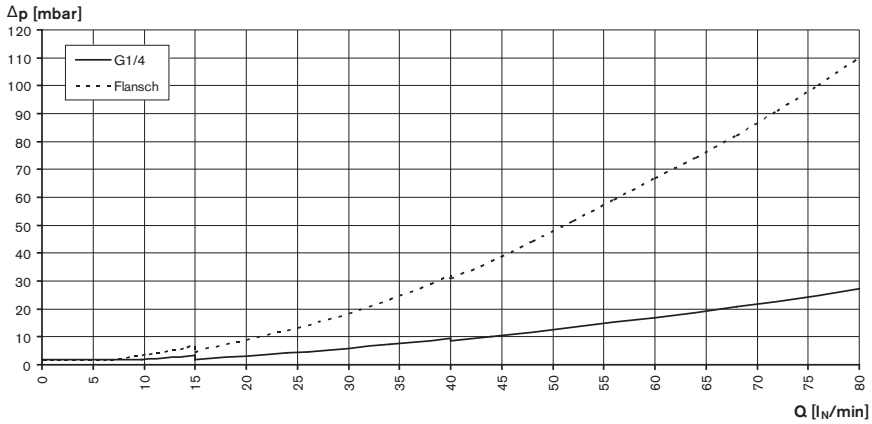


The diagram shows exemplarily the pressure loss characteristics when air fl owing through.
For determining the pressure loss with another gas it needs to calculate the air equivalent and respect the fl uidics needed with the other gas.

## Notes regarding the selection of the unit

(Other gases on request)

| Gas | Min. $Q_{Nom}$ [$l_N$/min] | Max. $Q_{Nom}$ [$l_N$/min] |
|---|---|---|
| **Argon** | 0.01 | 80 |
| **Helium** | 0.01 | 500 |
| **Carbon dioxide** | 0.02 | 40 |
| **Air** | 0.01 | 80 |
| **Methane** | 0.01 | 80 |
| **Oxygen** | 0.01 | 80 |
| **Nitrogen** | 0.01 | 80 |
| **Hydrogen** | 0.01 | 500 |

## Notes regarding the selection of the unit

The decisive factors for the perfect functioning of an MFM within the application are the fl uid compatibility, the normal inlet pressure and the correct choice of the fl ow meter range. The pressure drop over the MFM depends on the fl ow rate and the operating pressure.

**The request for quotation form on page 6 contains the relevant fl uid specifi cation.**

## Ordering table for accessories

| Article | Item no. |
|---|---|
| **9-pin electrical connection** | |
| D-Sub socket 9-pin solder connection with housing | 917 623 |
| **Adapters** [4] | |
| RS232 adapter for connection with an extension cable (item N0.917 039) | 667 530 |
| Computer extension cable for RS232 9-pin socket/plug 2m | 917 039 |
| USB adapter (version 1.1, USB-socket type B) | 670 693 |
| Communication software “MassFlowCommunicator” | |

[4] Das Adapterzubehör dient der Inbetriebnahme und Diagnose und ist nicht zwingend für den Betrieb erforderlich

## Software MassFlowCommunicator for Communication with Bürkert MFC/MFM

The communication software allows the user to program additionally various functions. For that purpose the MFC or MFM has to be connected to the computer by a RS232 adapter.

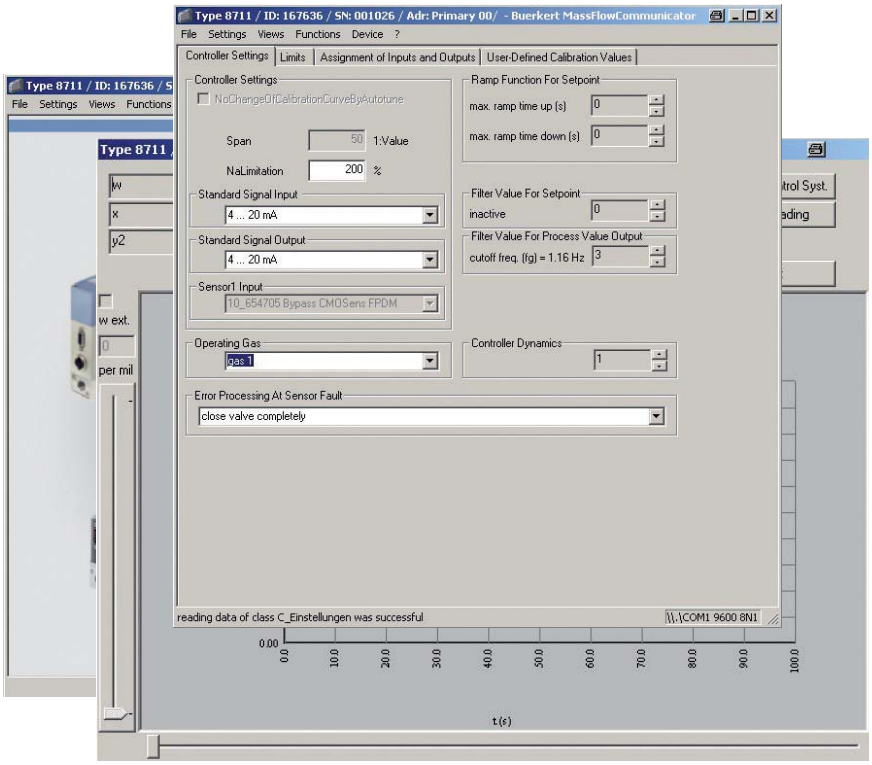

## Pin Assignment

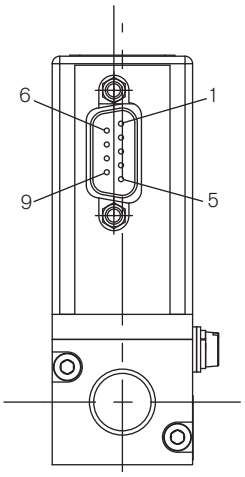


| Pin | Connection |
|---|---|
| 1 | Binary input (related to GND Pin 2) |
| 2 | GND |
| 3 | Power supply +24V DC |
| 4 | Relay, C contact |
| 5 | Relay, NC contact |
| 6 | TX+ (RS485-Y) – bridge with pin 9 at half-duplex |
| 7 | TX- (RS485-Z) – bridge with pin 8 at half-duplex |
| 8 | RX- (RS485-B) |
| 9 | RX+ (RS485-A) |

## Networking

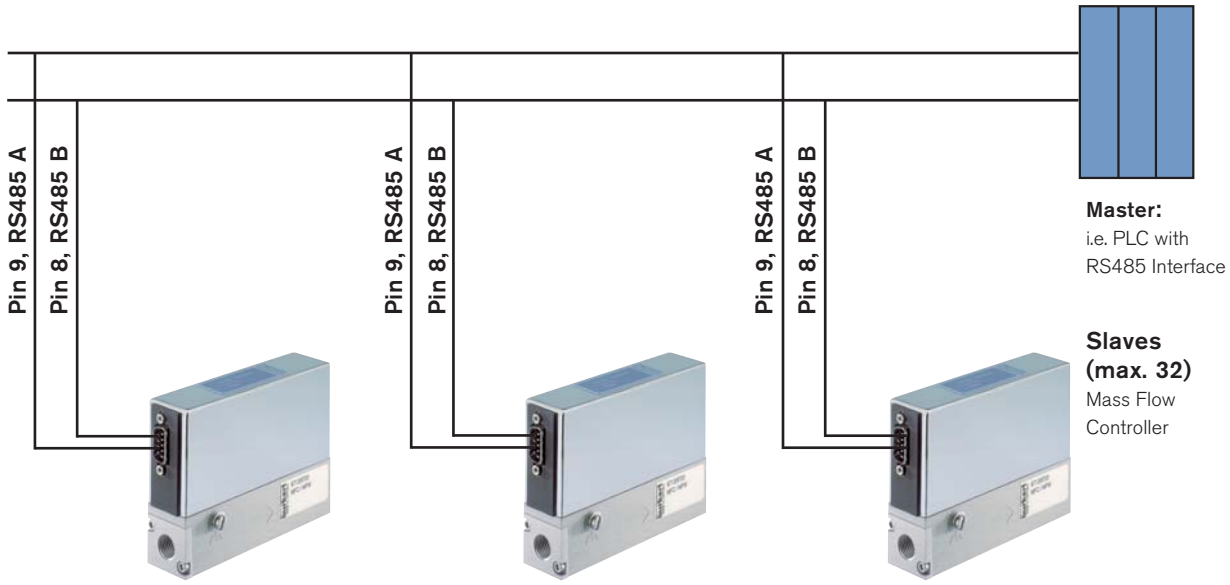

## Dimensions [mm]

### Threaded version

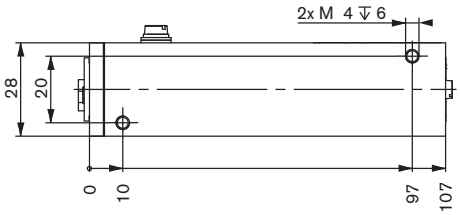


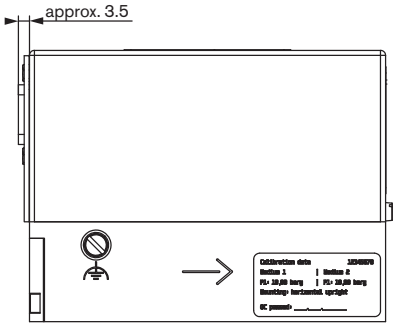


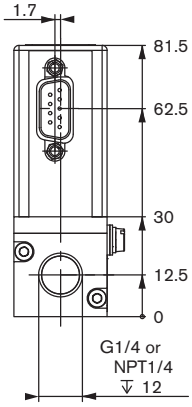


### Sub-base version

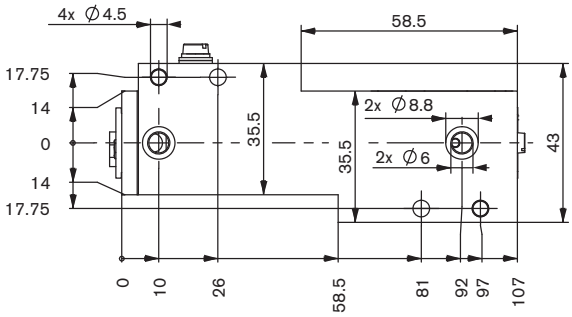


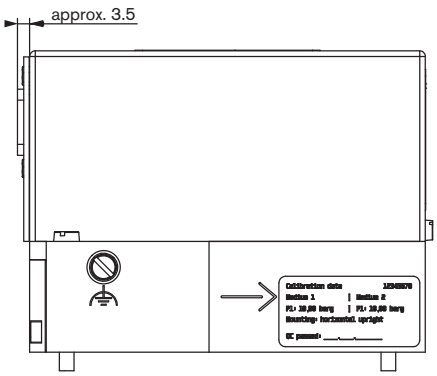


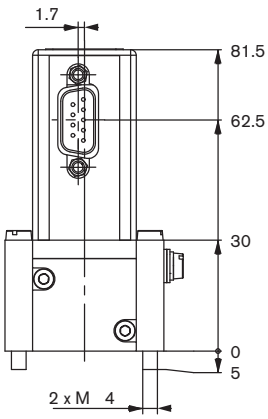

bürkert

**Note**
You can fill out the fields directly in the PDF file before printing out the form.

# MFC/MFM-applications - Request for quotation

## Please complete and send to your nearest Bürkert sales centre

| | |
|---|---|
| Company | Contact person |
| Customer No | Department |
| Address | Tel./Fax |
| Postcode/Town | E-mail |

☐ **MFC-Application** ☐ **MFM-Application** ☐ **Quantity** ☐ **Required delivery date**

## Medium data

**Type of gas (or gas proportion in mixtures)** ☐

**Density** ☐ kg/m³ 5)

**Gas temperature [°C or °F]** ☐ °C ☐ °F

**Moisture content** ☐ g/m³

**Abrasive components/solid particles** ☐ no ☐ yes, as follows: ☐

## Fluidic data

**Flow range $Q_{nom}$** ☐ Min. ☐ $l_N$/min 5) ☐ $l_S$/min (slpm) 6)
☐ Max. ☐ $m_N^3$/h 5) ☐ kg/h
☐ $cm_N^3$/min 5) ☐ $cm_S^3$/min (sccm) 6)
☐ $l_N$/h 5) ☐ $l_S$/h 6)

**Inlet pressure at $Q_{nom}$** 7) $p_1$= ☐ bar(g) ■

**Outlet pressure at $Q_{nom}$** $p_2$= ☐ bar(g) ■

**Max. inlet pressure $P_{1max}$** ☐ bar(g) ■

**MFC/MFM port connection**
☐ without screw-in fitting
☐ 1/4" G-thread (DIN ISO 228/1)
☐ 1/4" NPT-thread (ANSI B1.2)
☐ with screw-in fitting (acc. to specification for pipeline)
☐ mm pipeline (external Ø)
☐ inch pipeline (external Ø)
☐ Flange version

**Installation**
☐ horizontal
☐ vertical, flow upwards ☐ vertical, flow downwards

**Ambient temperature** ☐ °C

## Material data

**Body** ☐ Aluminium ☐ Stainless steel

**Seal** ☐ FKM ☐ EPDM

■ Please quote all pressure values as overpressures with respect to atmospheric pressure bar(ü)

5) at: 1,013 bar(a) and 0°C 6) at: 1.013 bar (a) and 20°C 7) matches with calibration pressure

reset form

**To find your nearest Bürkert facility, click on the orange box** →

In case of special application conditions, please consult for advice.

Subject to alteration.
© Christian Bürkert GmbH & Co. KG

1212/4_EU_en_00891971

bürkert
FLUID CONTROL SYSTEMS

# Mass Flow Meter (MFM) for Gases

- Bypass MFC with capillary technology for nominal flow rates from 5 $ml_N$/min to 15 $l_N$/min
- Applicable for aggressive gases
- Compact design and digital communication

Type 8705 can be combined with...

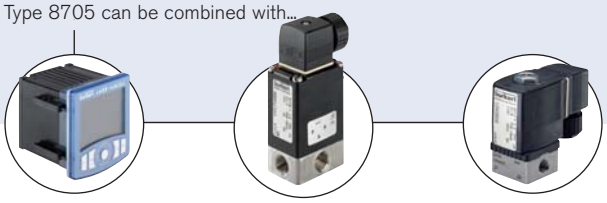

**Type 8619**
Multichannel program controller

**Type 0330**
3/2 or 2/2-way solenoid valve

**Type 6013**
2/2-way solenoid valve

Mass flow meters are used in process technology for the direct measurement of the mass flow of gases. In case of volumetric flow meters, it is necessary to measure the temperature and the pressure either the density, because gases change their density or rather their volume depending on the pressure. The measurement of the mass flow, on the other hand, is independent of the pressure and the temperature.

The digital mass flow meter Type 8705 uses a classic bypass sensor (see the description on page 2). The actual flow can be read out digitally over RS-communication. Type 8705 can optionally be calibrated for two different gases, the user can switch between these two gases.

The materials of the parts that come into contact with the medium are selected according to customer specification so that the unit can be operated with the complete range of standard process gases.

## Technical data

| | |
|---|---|
| **Full scale range**[1] ($Q_{nom}$) | 5 to 15000 $ml_N$/min[2]<br>$N_2$ equivalent |
| **Control range** | 1:50 |
| **Operating gases** | Neutral, or aggressive gases |
| **Calibration gas** | Operating gas or air with conversion factor |
| **Max. operating pressure** (Inlet pressure) | 10 bar (145 psi) |
| **Medium temperature** | -10 to +70°C<br>(-10 to +60°C for oxygen) |
| **Ambient temperature** | -10 to +50°C[3], others on request |
| **Accuracy** | ±1.5% o.R. ±0.3% F.S.<br>(after 30min. heating period) |
| **Repeatability** | ±0.1% F.S. |
| **Response time ($t_{95\%}$)** | <3 s |
| **Materials**<br>Body<br>Housing<br>Seals | <br>Stainless steel<br>PC (Polycarbonate) or metal<br>FKM, EPDM or FFKM |
| **Port connections** | NPT 1/4, G 1/4, Screw-in fitting or sub-base, others on request |

| | |
|---|---|
| **Electr. connection** | D-Sub plug 9-pin |
| **Power supply** | 24V DC |
| **Voltage tolerance** | ±10 % |
| **Residual ripple** | <2 % |
| **Power consumption** | Max. 2.5 W |
| **Communication** | Digital via RS485 (half duplex or full duplex), RS422, RS232 with adapter |
| **Protection class** | IP40 |
| **Dimensions [mm]** | See drawings on page 5 |
| **Total weight** | ca. 850 g (stainless steel) |
| **Mounting position** | Horizontal or vertical |
| **Light emitting diode display** (default, other allocations possible) | Indication for Power, Limit Error |
| **Binary input** (default, other functions possible) | Two<br>1. Not assigned<br>2. Not assigned |
| **Binary output** (default, other functions possible) | One relay-output for Limit (process value close to full scale value)<br>Max. load: 25V, 1A, 25VA |

[1] The nominal flow value is the max. flow value calibrated which can be controlled. The nominal flow range defines the range of nominal flow rates (full scale values) possible.
[2] Index N: Flow rates referred to 1.013 bar and 0° C.
Alternatively there is an Index S available which refers to 1.013 bar and 20° C
[3] Higher temperatures on request

## Measuring principle

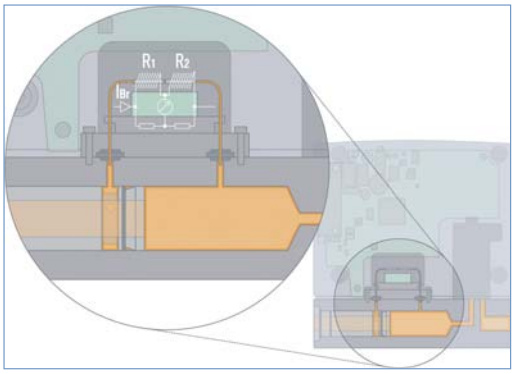


The measurement is based on the bypass principle. A laminar flow element in the main channel generates a small pressure drop. This drives a small flow, proportional to the main flow, through the bypass (sensor tube).

Two heating resistors, which are connected in a measuring bridge, are wounded on this stainless steel tube. In the zero-flow state, the bridge is balanced, but with flow, heat is transported in the flow direction and the bridge becomes unbalanced.

The dynamics of the measurement is limited by the tube walls, which act as a thermal barrier. Through use of suitable software response times are obtained (in the range of a few seconds) that are adequate for a wide range of applications.

With contaminated gases we recommend to install filter elements upstream. This avoids changes in the division ratio between main flow and sensor tube, as well as changes in the heat transmission caused by deposits on the walls of the sensor tube.

With these sensors even aggressive gases can be measured, because all essential parts in contact with the gas are fabricated in stainless steel. With this sensor principle it is also possible to convert between different gases.

**$Q(Gas) = f \times Q(N_2)$**

By using the gas factors it is possible that the accuracy is not within the datasheet specification.

| gas | factor f |
|---|---|
| $N_2$ | 1.00 |
| Luft | 1.00 |
| $O_2$ | 0.98 |
| $H_2$ | 1.01 |
| Ar | 1.4 |
| He | 1.42 |
| $CO_2$ | 0.77 |

For applications which need high accuracy it is recommended to calibrate under application conditions.

The compatibility of the sealing materials of the MFMs should be checked before use with another gas.

## Pressure loss diagram (ref. to air)

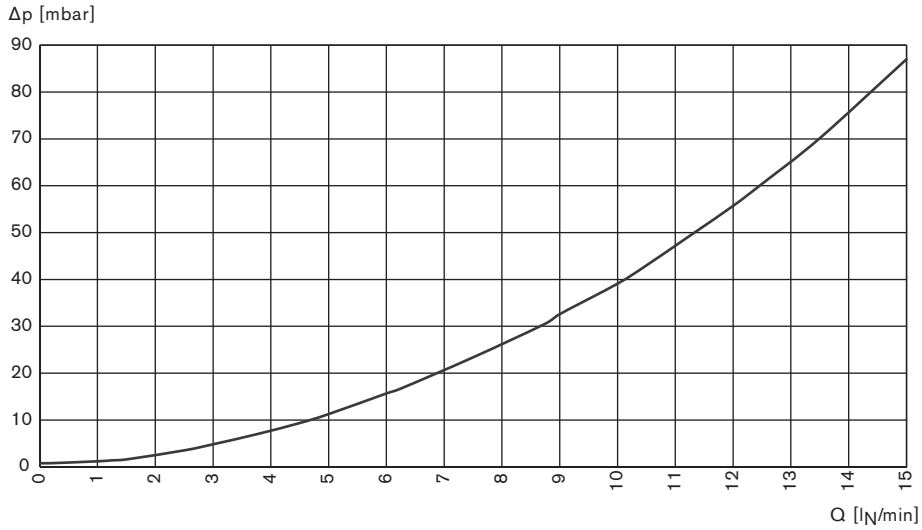


The diagram shows exemplarily the pressure loss characteristics when air flows through a flowmeter with ¼" pipe connection. For determining the pressure loss with another gas it needs to calculate the air equivalent.

## Notes regarding the selection of the unit

The decisive factors for the perfect functioning of a MFM within the application are the fluid compatibility, the normal inlet pressure and the correct choice of the flow meter range. The pressure drop over the MFM depends on the flow rate and the operating pressure.

**The request for quotation form on page 6 contains the relevant fluid specification. Please use in this way the experience of Bürkert engineers already in the design phase and provide us with a copy of the request containing the data of your application together with your inquiry or order.**

## Ordering table for accessories

| Article | Item no. |
|---|---|
| **9-pin electrical connection** | |
| D-Sub socket 9-pin solder connection with housing | 917 623 |
| **Adapters** [4] | |
| RS232 adapter for connection with an extension cable (item N0.917 039) | 667 530 |
| Computer extension cable for RS232 9-pin socket/plug 2m | 917 039 |
| USB adapter (version 1.1, USB-socket type B) | 670 693 |
| USB cable 2m, connector type A to connector type B | 772 299 |
| Communication software “MassFlowCommunicator” | |

[4] The adapters serve mainly for initial operation or diagnosis. Those are not obligatory for continuous operation.

## Software MassFlowCommunicator for Communication with Bürkert MFC/MFM

The communication software allows the user to program additionally various functions. For that purpose the MFC or MFM has to be connected to the computer by a RS232 adapter.

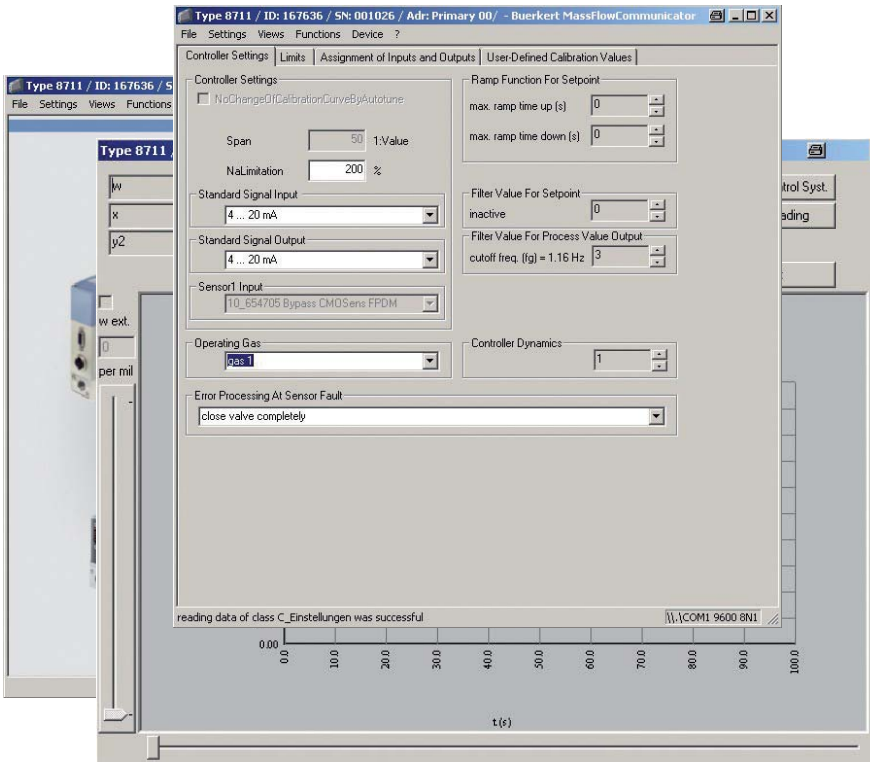

## Pin Assignment

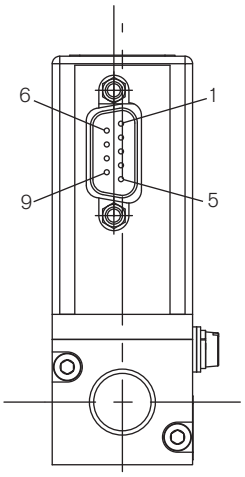


| Pin | Connection |
|---|---|
| 1 | Binary input (related to GND Pin 2) |
| 2 | GND |
| 3 | Power supply +24V DC |
| 4 | Relay, C contact |
| 5 | Relay, NC contact |
| 6 | TX+ (RS485-Y) – bridge with pin 9 at half duplex |
| 7 | TX- (RS485-Z) – bridge with pin 8 at half duplex |
| 8 | RX- (RS485-B) |
| 9 | RX+ (RS485-A) |

## Networking

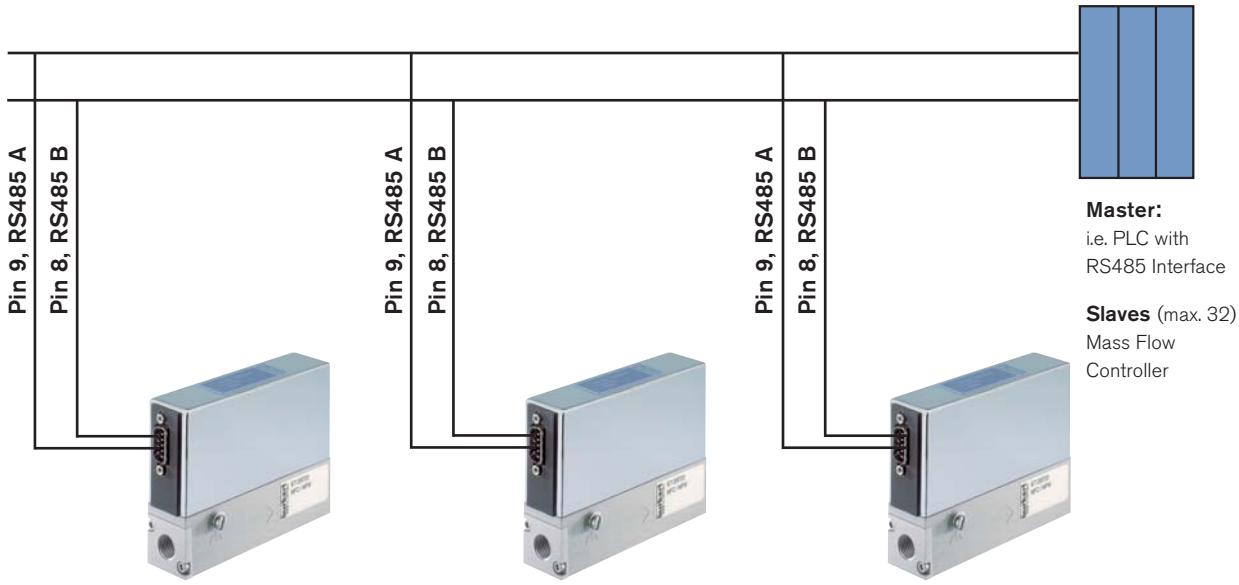

## Dimensions [mm]

### Threaded version

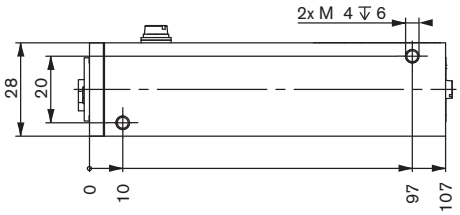


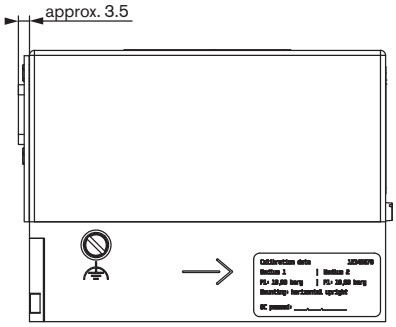


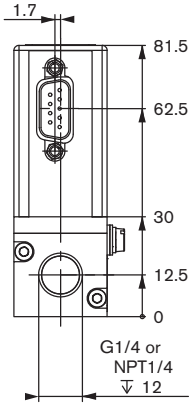


### Sub-base version

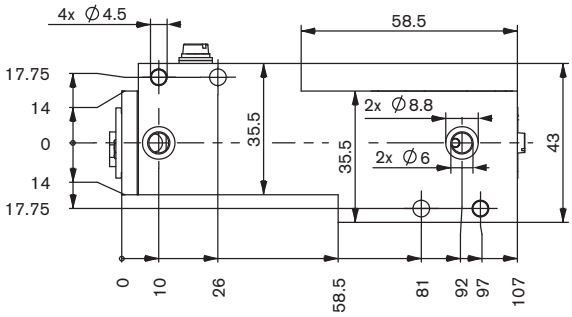


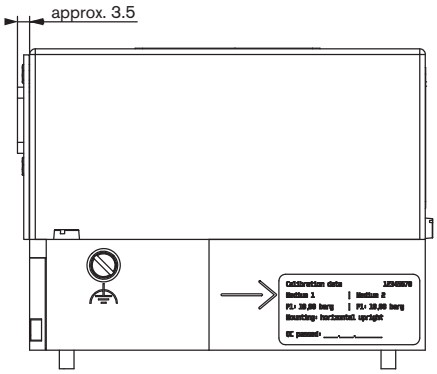


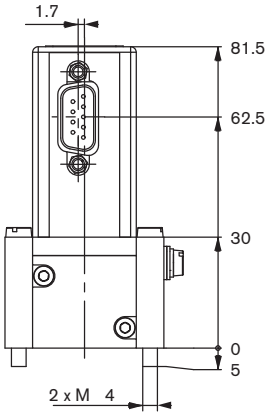

bürkert

**Note**
You can fill out the fields directly in the PDF file before printing out the form.

# MFC/MFM-applications - Request for quotation

## Please complete and send to your nearest Bürkert sales centre

| | |
|---|---|
| Company | Contact person |
| Customer No | Department |
| Address | Tel./Fax |
| Postcode/Town | E-mail |

☐ **MFC-Application** ☐ **MFM-Application** ☐ **Quantity** ☐ **Required delivery date**

## Medium data

**Type of gas (or gas proportion in mixtures)** ☐

**Density** ☐ kg/m³ 5)

**Gas temperature [°C or °F]** ☐ °C ☐ °F

**Moisture content** ☐ g/m³

**Abrasive components/solid particles** ☐ no ☐ yes, as follows: ☐

## Fluidic data

**Flow range $Q_{nom}$** ☐ Min. ☐ $l_N$/min 5) ☐ $l_S$/min (slpm) 6)
☐ Max. ☐ $m_N^3$/h 5) ☐ kg/h
☐ $cm_N^3$/min 5) ☐ $cm_S^3$/min (sccm) 6)
☐ $l_N$/h 5) ☐ $l_S$/h 6)

**Inlet pressure at $Q_{nom}$** 7) $p_1$= ☐ bar(g) ■

**Outlet pressure at $Q_{nom}$** $p_2$= ☐ bar(g) ■

**Max. inlet pressure $P_{1max}$** ☐ bar(g) ■

**MFC/MFM port connection**
☐ without screw-in fitting
☐ 1/4" G-thread (DIN ISO 228/1)
☐ 1/4" NPT-thread (ANSI B1.2)
☐ with screw-in fitting (acc. to specification for pipeline)
☐ mm pipeline (external Ø)
☐ inch pipeline (external Ø)
☐ Flange version

**Installation**
☐ horizontal
☐ vertical, flow upwards ☐ vertical, flow downwards

**Ambient temperature** ☐ °C

## Material data

**Body** ☐ Aluminium ☐ Stainless steel

**Seal** ☐ FKM ☐ EPDM

■ Please quote all pressure values as overpressures with respect to atmospheric pressure bar(ü)

5) at: 1,013 bar(a) and 0°C 6) at: 1.013 bar (a) and 20°C 7) matches with calibration pressure

reset form

**To find your nearest Bürkert facility, click on the orange box →**

In case of special application conditions, please consult for advice.

Subject to alteration.
© Christian Bürkert GmbH & Co. KG

1307/0_EU-en_00895248

bürkert
FLUID CONTROL SYSTEMS

# Mass Flow Controller (MFC) for Gases

Type 8713 can be combined with...

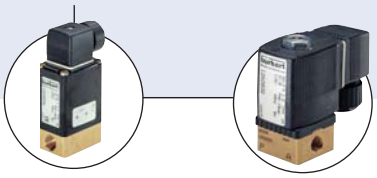

**Typ 0330**
3/2 or 2/2-way valve

**Typ 6013**
2/2-way valve

- Direct flow measurement by MEMS- Technology for nominal flow rates from 10 $ml_N$/min to 80 $l_N$/min ($N_2$)
- High accuracy and repeatability
- Short settling time
- Compact design and digitally communication

Type 8713 controls the mass flow of gases that is relevant for most applications in process technologies. The measured value will be compared in the digital control electronics with the predefined set point according to the signal; if a control difference is present, the control value output to the proportional valve will be modified using a PI-control algorithm. Due to the fact that the sensor is directly in contact with the gas a very fast response time of the MFC is reached. In this way, the mass flow can be maintained at a fixed value or a predefined profile can be followed, regardless of pressure variations or other changes in the system. Type 8713 can optionally be calibrated for two different gases, the user is able to switch between these two gases. As control element a direct-acting proportional valve guarantees a high sensitivity and a good control characteristics of the MFC. This instrument communicates digitally with master devices, no further A/D conversions needed.

| Technical Data | |
|---|---|
| **Nominal flow range**[1] ($Q_{nominal}$) | 10 $ml_N$/min [2] to 80 $l_N$/min ($N_2$), see table on p. 2 |
| **Turn-down ratio** | 1:50, higher turn-down ratio on request |
| **Operating gas** | Neutral, non-contaminated gases, on request |
| **Calibration gas** | Operating gas or air with conversion factor |
| **Max. operating pressure** (Inlet pressure) | 10 bar (145 psi) depending on the orifice of the valve |
| **Gas temperature** | -10 to +70°C (-10 to +60°C with oxygen) |
| **Ambient temperature** | -10 to +50°C[3] |
| **Accuracy** | ±0.8% o.R. ±0.3% F.S. (after 1 min. warm up time) |
| **Repeatability** | ±0.1% F.S. |
| **Settling time ($t_{95\%}$)** | < 300 ms |
| **Materials** | |
| Body | Aluminium or stainless steel |
| Housing | Metal |
| Seals | FKM, EPDM |
| **Port connection** | NPT 1/4, G 1/4, screw-in fitting or sub-base, others on request |
| **Control valve** | Normally closed |
| Valve orifice | 0.05 to 4.0 mm |
| $k_{VS}$ value | 0.00006 to 0.32 $m^3$/h |

| | |
|---|---|
| **Electr. connection** | Plug D-Sub 9-pin |
| **Power supply** | 24V DC |
| **Voltage tolerance** | ±10% |
| **Residual ripple** | < 2% |
| **Power consumption** | Max. 11.5 W (depending on control valve used) |
| **Communication** | Digital via RS485 (half-duplex or full-duplex), RS422, RS232 via adapter |
| **Protection class** | IP40 |
| **Dimensions [mm]** | see drawings p. 5-6 |
| **Total weight** | ca. 500 g (aluminium body) |
| **Installation** | horizontal or vertical |
| **Light emitting diodes** (default functions, other functions programmable) | Indication for power, limit and error |
| **Binary inputs** (default functions, other functions programmable) | Two<br>1. Start Autotune<br>2. not assigned |
| **Binary output** (default functions, other functions programmable) | One relay output for:<br>1. Limit (setpoint not reached)<br>Max. Load: 25V, 1A, 25VA |

[1] The nominal flow value is the max. flow value calibrated which can be controlled. The nominal flow range defines the range of nominal flow rates (full scale values) possible.
[2] Index N: Flow rates referred to 1.013 bar and 0° C.
Alternatively Index S which refers to 1.013 bar and 20° C
[3] Higher temperature on request.

## Measurement principle

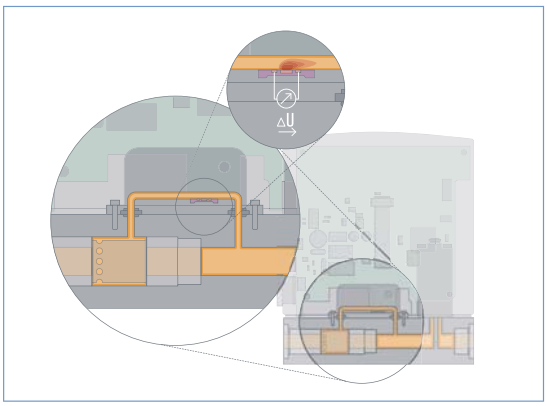


The actual flow rate is detected by a sensor. This operates according to a thermal principle which has the advantage of delivering the mass flow without any corrections for the required pressure or temperature.

A small part of the total gas stream is diverted into a small, specifically designed bypass channel, that ensures laminar flow conditions. The sensor element is a chip immersed into the wall of this channel. The chip contains a heating resistor and two temperature sensors (thermopiles) which are arranged symmetrically upstream and downstream of the heater. The differential voltage of the thermopiles is a measure of the mass flow rate passing this bypass channel. The calibration procedure effectuates a unique assignment of the sensor signal to the total flow rate passing the device.

## Nominal Flow Range of Typical Gases

(other gases on request)

| Gas | Min. $Q_{Nom}$ [$l_N$/min] | Max. $Q_{Nom}$ [$l_N$/min] |
|---|---|---|
| **Argon** | 0.01 | 80 |
| **Helium** | 0.01 | 500 |
| **Carbon dioxide** | 0.02 | 40 |
| **Air** | 0.01 | 80 |
| **Methane** | 0.01 | 80 |
| **Oxygen** | 0.01 | 80 |
| **Nitrogen** | 0.01 | 80 |
| **Hydrogen** | 0.01 | 500 |

## Notes regarding the selection of the unit

For the proper choice of the actuator orifice within the MFC, not only the required maximum flow rate $Q_{nom}$, but also the pressure values *directly* before and after the MFC ($p_1$, $p_2$) at this flow rate $Q_{nom}$ should be known. In general, these pressures are not the same as the overall inlet and outlet pressures of the whole plant, because usually there are additional flow resistors (tubing, additional shut-off valves, nozzles etc.) present both before and after the controller.

Please use the request for quotation form on p. 7 to indicate the pressures *directly* before and after the MFC. If these should be unknown or not accessible to a measurement, estimates are to be made by taking into account the approximate pressure drops over the flow resistors before and after the MFC, respectively, at a flow rate of $Q_{nom}$.
In addition, please quote the maximum inlet pressure $p_{1max}$ to be encountered. This data is needed to make sure the actuator is able to provide a close-tight function within all the specified modes of operation.

**The request form on page 7 contains the relevant fluid specification. Using the experience of Bürkert engineers already in the design phase provide us with a copy of the request containing the necessary data together with your inquiry or order.**

## Ordering table for accessories

| Article | Item no. |
|---|---|
| **9-pin electrical connection** | |
| D-Sub socket 9-pin solder connection with housing | 917 623 |
| **Adapters** [4] | |
| RS232 adapter for connection with an extension cable (item N0.917 039) | 667 530 |
| Computer extension cable for RS232 9-pin socket/plug 2m | 917 039 |
| USB adapter (version 1.1, USB-socket type B) | 670 693 |
| Communication software “MassFlowCommunicator” | |

[4] The adapters serve mainly for initial operation or diagnosis. Those are not obligatory for continuous operation.

## Software MassFlowCommunicator for Communication with Bürkert MFC/MFM

The communication software allows the user to program additionally various functions. For that purpose the MFC or MFM has to be connected to the computer by a RS232 adapter.

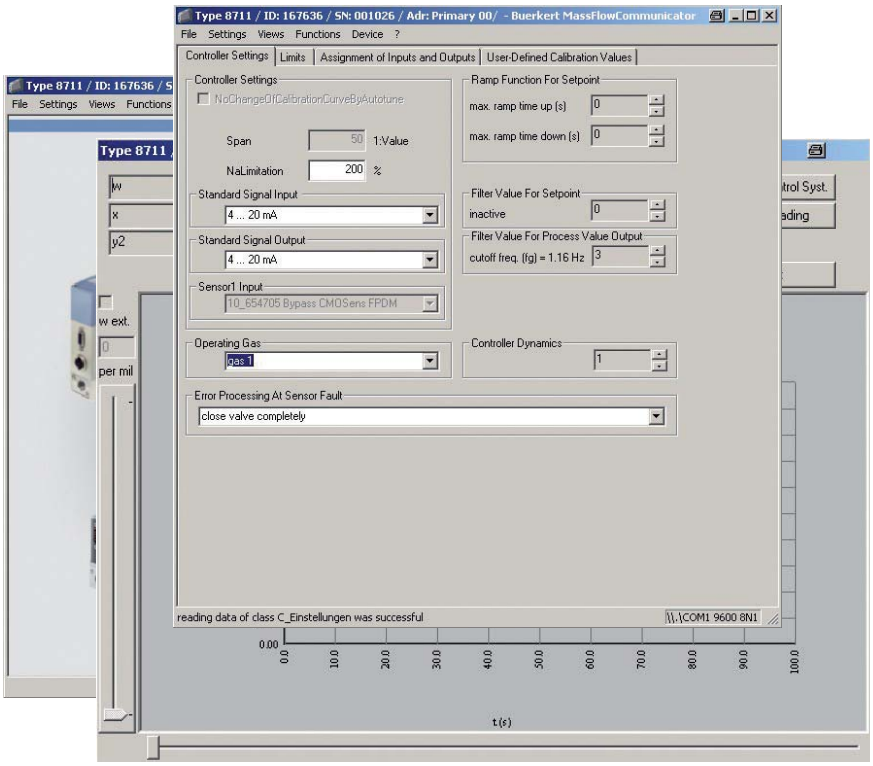

## Pin Assignment

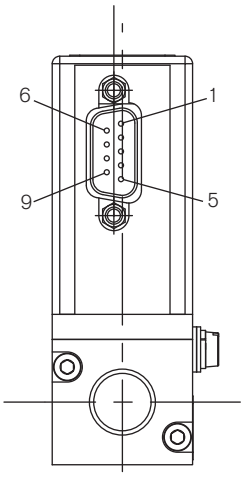


| Pin | Connection |
|---|---|
| 1 | Binary input (related to GND Pin 2) |
| 2 | GND |
| 3 | Power supply +24V DC |
| 4 | Relay, C contact |
| 5 | Relay, NC contact |
| 6 | TX+ (RS485-Y) – bridge with pin 9 at half duplex |
| 7 | TX- (RS485-Z) – bridge with pin 8 at half duplex |
| 8 | RX- (RS485-B) |
| 9 | RX+ (RS485-A) |

## Networking

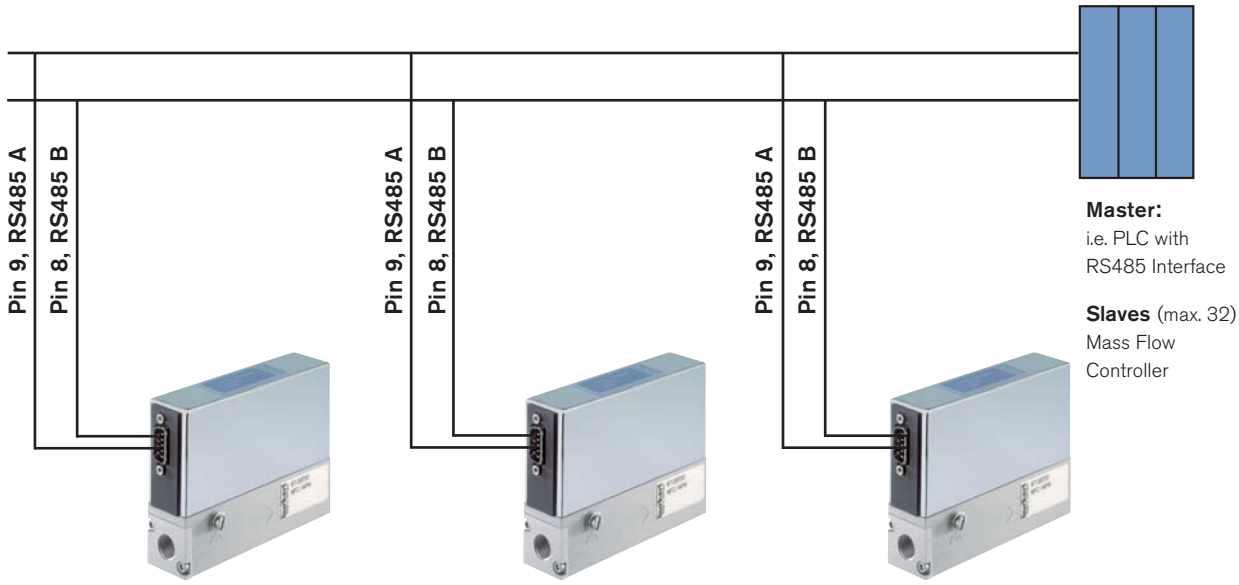

## Dimensions [mm]

### Threaded version

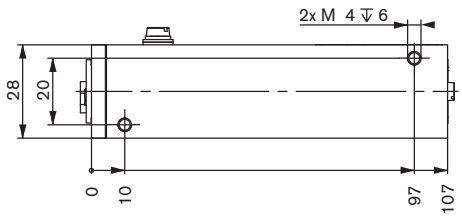


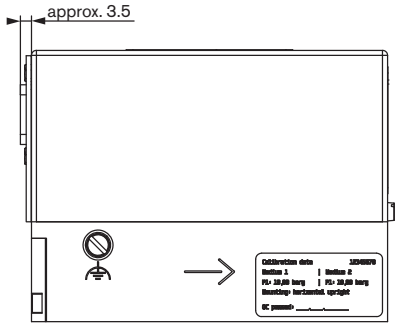


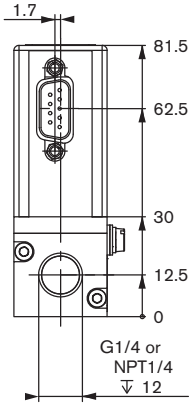


### Sub-base version

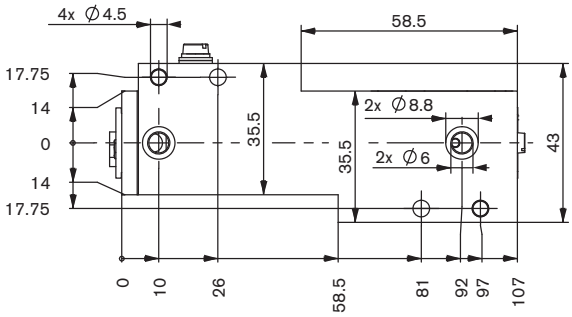


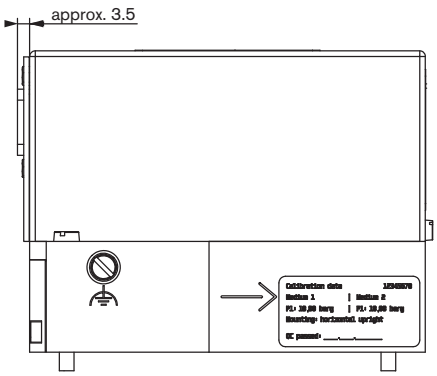


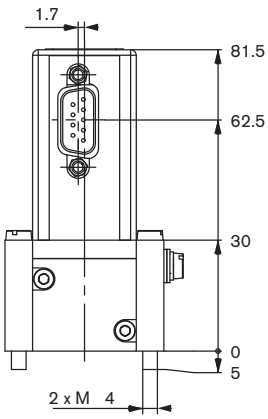

## Dimensions [mm], continued

### Version with external valve

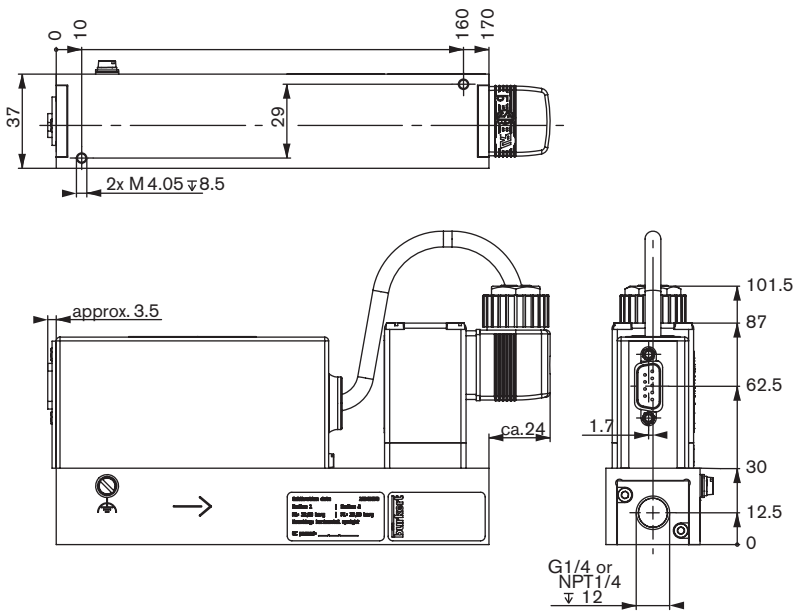

bürkert

**Note**
You can fill out the fields directly in the PDF file before printing out the form.

# MFC/MFM-applications - Request for quotation

## Please complete and send to your nearest Bürkert sales centre

| | |
|---|---|
| Company | Contact person |
| Customer No | Department |
| Address | Tel./Fax |
| Postcode/Town | E-mail |

☐ **MFC-Application** ☐ **MFM-Application** ☐ **Quantity** ☐ **Required delivery date**

## Medium data

**Type of gas (or gas proportion in mixtures)** ☐

**Density** ☐ kg/m³ 5)

**Gas temperature [°C or °F]** ☐ °C ☐ °F

**Moisture content** ☐ g/m³

**Abrasive components/solid particles** ☐ no ☐ yes, as follows: ☐

## Fluidic data

**Flow range $Q_{nom}$** ☐ Min. ☐ $l_N$/min 5) ☐ $l_S$/min (slpm) 6)
☐ Max. ☐ $m_N^3$/h 5) ☐ kg/h
☐ $cm_N^3$/min 5) ☐ $cm_S^3$/min (sccm) 6)
☐ $l_N$/h 5) ☐ $l_S$/h 6)

**Inlet pressure at $Q_{nom}$** 7) $p_1$= ☐ bar(g) ■

**Outlet pressure at $Q_{nom}$** $p_2$= ☐ bar(g) ■

**Max. inlet pressure $P_{1max}$** ☐ bar(g) ■

**MFC/MFM port connection**
☐ without screw-in fitting
☐ 1/4" G-thread (DIN ISO 228/1)
☐ 1/4" NPT-thread (ANSI B1.2)
☐ with screw-in fitting (acc. to specification for pipeline)
☐ mm pipeline (external Ø)
☐ inch pipeline (external Ø)
☐ Flange version

**Installation**
☐ horizontal
☐ vertical, flow upwards ☐ vertical, flow downwards

**Ambient temperature** ☐ °C

## Material data

**Body** ☐ Aluminium ☐ Stainless steel

**Seal** ☐ FKM ☐ EPDM

■ Please quote all pressure values as overpressures with respect to atmospheric pressure bar(ü)

5) at: 1,013 bar(a) and 0°C 6) at: 1.013 bar (a) and 20°C 7) matches with calibration pressure

**To find your nearest Bürkert facility, click on the orange box** →

reset form

In case of special application conditions, please consult for advice.

Subject to alteration.
© Christian Bürkert GmbH & Co. KG

bürkert
FLUID CONTROL SYSTEMS

# Mass Flow Controller (MFC) for Gases

- Inline MFC for full scale rates from 20 $l_N$/min to 1500 $l_N$/min; 1/4" to 1"
- High accuracy
- Short settling time
- Optional fieldbus

Type 8626 can be combined with…

**Type 8619**
Multichannel program controller

**Type 0330**
3/2-way valve

**Type 6013**
2/2-way valve

The Type 8626 mass flow controller forms an integrated system, consisting of the flow sensor, control electronics and control valve. Using this controller, mass flows of gases can be kept constant or can follow a predefined set-point profile regardless of interfering influences (such as pressure or temperature variations). The sensor works according to the thermal principle (constant-temperature anemometer). The measurement is made in the main channel and provides the mass flow directly without any corrections (see description on page 2). The digital flow controller compares the set point with the actual value and calculates the control signal for the proportional valve. The direct-acting solenoid control valve works according to the well-tried plunger-type principle, and is driven by a PWM voltage signal. Besides its control function an intelligent algorithm ensures that the valve closes tight with 0% set point. The measurement in the main flow of the MFC Type 8626 is characterized by an excellent dynamics and a low sensitivity to contamination. The MFC can be used in versatile flow control tasks.

- Process technology
- Heat treatment
- Environmental technology
- Material coating
- Burner controls
- Fuel cell technology

## Technical Data

| | |
|---|---|
| **Nominal flow range** [1] ($Q_{nom}$) | 20 to 1500 $l_N$/min[2], $N_2$ equivalent<br>see table on page 2, higher flows on request |
| **Turn-down ratio** | 1:50 [3] |
| **Operating gas** | Neutral, non-contaminated gases, others available on request |
| **Calibration gas** | Operating gas or air with correcting function |
| **Max. operating pressure** (inlet pressure) | Up to max. 10 bar, depending on the orifice of the valve |
| **Gas temperature** | -10 to +70°C (-10 to +60°C with oxygen) |
| **Ambient temperature** | -10 to +45°C (higher temperatures on request) |
| **Accuracy** (after 15 min warm up time) | ±1.5% o.R. ±0.3% F.S.<br>(o.R.: of reading; F.S.: of full scale) |
| **Repeatability** | ±0.1% F.S. |
| **Settling time** ($t_{95\%}$) | <500 ms |
| **Materials** | |
| Body | Aluminium (black anodized) or stainless steel |
| Housing | Aluminium (coated) |
| Seals | FKM, EPDM |

[1] The nominal flow value is the max. flow value calibrated which can be controlled. The nominal flow range defines the range of nominal flow rates (full scale values) possible.
[2] Index N: Flow rates referred to 1.013 bar and 0° C.
Alternatively there is an Index S available which refers to 1.013 bar and 20° C
[3] With vertical installation and flow downwards the turn-down ratio is 1:10

| | |
|---|---|
| **Port connection** | G 1/4", 3/8", 1/2", 3/4", 1"<br>NPT 1/4", 3/8", 1/2", 3/4", 1" |
| **Control valve** | Normally closed |
| Valve orifice | 0.8 to 12 mm |
| $k_{Vs}$ value | 0.02 to 2.8 $m^3$/h |
| **Electr. connection** | Socket M16, round, 8-pin and socket D-Sub HD15, 15-pin |
| Additionally with: | |
| -PROFIBUS-DP: | Socket M12 5-pin or D-Sub 9-pin |
| -DeviceNet/CANopen: | Plug M12 5-pin or D-Sub 9-pin |
| with RS485 version only: | Plug D-Sub 9-pin |
| **Operating voltage** | 24V DC |
| **Voltage tolerance** | ±10% |
| **Residual ripple** | < 2% |
| **Power consumption** | 12,5 W–37 W (depending on version) |
| **Type of protection** (with connected cables) | IP65 |
| **Dimensions** | See drawings on p. 6–9 |
| **Total weight** (examples) | 2,5 kg (Al, 16 W-valve)<br>4,5 kg (VA, 16 W-valve) |
| **Mounting position** | Horizontal or vertical |
| **Light emitting diodes** (Default, other functions programmable) | Indication for<br>1. Power, 3. Limit<br>2. Communication 4. Error |

| Technical Data *(cont.)* | | | |
|---|---|---|---|
| **Device variant** | **Analog signal version** | **Fieldbus version** | **RS485 version (only D-Sub, 9-pin)** |
| **Analog communication**<br>Input signal (set point)<br>Input impedance<br><br>Output signal (actual flow)<br>Max. current voltage output<br>Max. load current output | <br>0-5 V, 0-10 V, 0-20 mA or 4-20 mA<br>>20 kΩ (voltage)<br><300 Ω (current)<br>0-5 V, 0-10 V, 0-20 mA or 4-20 mA<br>10 mA<br>600 Ω | None | None |
| **Fieldbus option**<br>(D-Sub HD15 covered with sealed plate for, pins for analogue inputs/outputs not connected) | None | PROFIBUS-DP, DeviceNet, CANopen | Modbus RTU (via RS interface) |
| **Digital communication**<br>via adapter possible: | RS232 (supports Modbus RTU)<br>RS485, RS422 or USB | | RS485, RS422<br>USB |
| **Binary inputs**<br>(Default, other functions programmable) | Three:<br>1. Start Autotune<br>2. not assigned<br>3. not assigned | | One: Start Autotune |
| **Binary outputs**<br>(Default, other functions programmable) | Two relay outputs<br>1. Limit (desired value cannot be achieved)<br>2. Error (e.g. sensor fault)<br>Load capacity: max. 60 V, 1 A, 60 VA | | One relay output<br>1. Limit (desired value cannot be achieved)<br>Load capacity: max. 25 V, 1 A, 25 VA |

## Measuring Principle

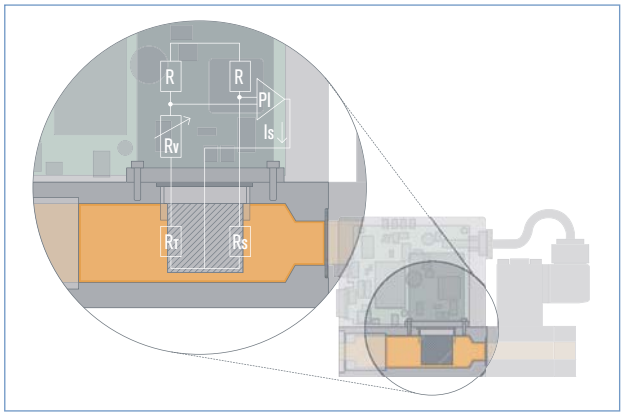


This sensor works as a hot-film anemometer in the so-called CTA operational mode (Constant Temperature Anemometer). To do this, two resistors with precisely specified temperature coefficients located directly in the media flow and three resistors located outside the flow are connected together to form a bridge.

The first resistor in the gas flow ($R_T$) measures the fluid temperature, while the second, low-value resistor ($R_S$) is heated so that it is maintained at a fixed, predefined over-temperature with respect to the fluid temperature. The heating current required to maintain this is a measure of the heat being removed by the flowing gas, and represents the primary measurement.

An adequate flow conditioning within the MFC and the calibration with high-quality flow standards ensure that the mass of gas flowing per time unit can be derived from the primary signal with high accuracy.

## Nominal Flow Ranges of Typical Gases

(other gases on request)

| Gas | Min. $Q_{nom}$ [$l_N$/min] | Max. $Q_{nom}$ [$l_N$/min] |
|---|---|---|
| **Acetylene** | 20 | 975 |
| **Ammonia** | 20 | 1250 |
| **Argon** | 20 | 1500 |
| **Carbon dioxide** | 20 | 800 |
| **Air** | 20 | 1500 |
| **Methane** | 20 | 750 |
| **Propane** | 20 | 400 |
| **Oxygen** | 20 | 1500 |
| **Nitrogen** | 20 | 1500 |

## Notes Regarding the Configuration

For the proper choice of the actuator orifice within the MFC, not only the required maximum flow rate $Q_{nom}$, but also the pressure values directly before and after the MFC ($p_1$, $p_2$) at this flow rate $Q_{nom}$ should be known. In general, these pressures are not the same as the overall inlet and outlet pressures of the whole plant, because there are usually additional flow resistors (tubing, additional shut-off valves, nozzles etc.) present both before and after the controller.

Please use the specification sheet (p. 10) to indicate the pressures directly before and after the MFC. If these should be unknown or not accessible to a measurement, estimates are to be made by taking into account the approximate pressure drops over the flow resistors before and after the MFC, respectively, at a flow rate of $Q_{nom}$.

In addition, please quote the maximum inlet pressure $p_{1max}$ to be encountered. This data is needed to make sure the actuator is able to provide a close-tight function within all the specified modes of operation.

**Please use the form on page 10 for the information about your specific requirements.**

## Ordering Chart for Accessories

| Article | Item No. | |
|---|---|---|
| **Connectors/Cables** | | |
| Round plug M16 8-pin (solder connection) | 918 299 | |
| Round plug M16 8-pin with 5m cable | 787 733 | |
| Round plug M16 8-pin with 10m cable | 787 734 | |
| Plug D-Sub HD15 15-pin with 5m cable | 787 735 | |
| Plug D-Sub HD15 15-pin with 10m cable | 787 736 | |
| **Adapters** [4] | | |
| RS232 adapter for connection to a computer, connection with an extension cable (item no. 917039) | 654 757 | |
| Extension cable for RS232 9-pin socket/plug 2 m | 917 039 | |
| RS422-Adapter (RS485 compatible) | 666 370 | |
| USB-Adapter for D-Sub HD15 | 670 696 | |
| USB-Adapter for D-Sub 9-pin (RS485 Version) | 670 693 | |
| USB connection cable 2 m | 772 299 | |
| Adapter for manual bus adresse settings (instad of SW) | 667 525 | |
| Software MassFlowCommunicator | Download from | |
| **Accessories for Fieldbus** | **PROFIBUS DP (B-coded)** | **DeviceNet/ CANopen (A-coded)** |
| M12-Plug [5] | 918 198 | 917 115 |
| M12-socket (coupling) [5] | 918 447 | 917 116 |
| Y-junction [5] | 902 098 | 788 643 |
| T-junction | 918 531 | (on request) |
| Shut-off resistor | 902 553 | (on request) |
| GSD-File (PROFIBUS), EDS-File (DeviceNet, CANopen) | Download from (see Type 8626) | |

[4] The adapters serve mainly for initial operation or diagnosis. Those are not obligatory for continuous operation.
[5] The two M12 connectors as listed above cannot be used together on the same side of the Y-junction. At least one of the two M12 connection needs to be a prefabricated cable which uses typiclly a thinner connector.

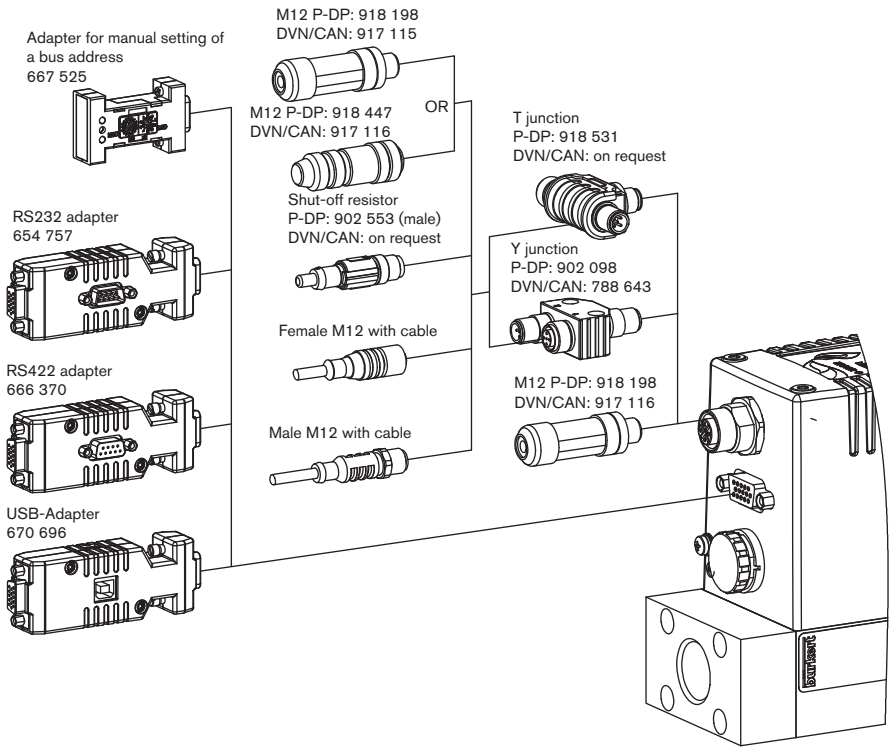

## Pin Assignment

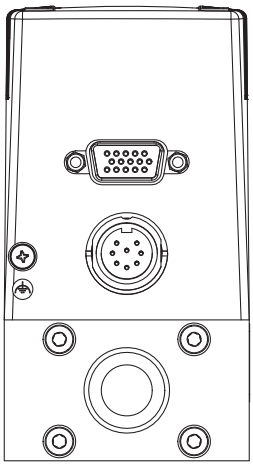

Standard

**Socket D-Sub HD15**

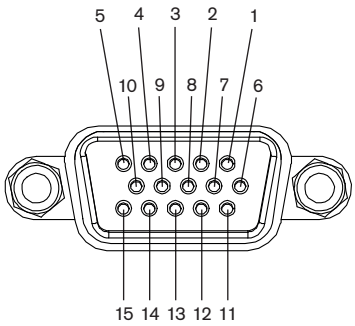


| Pin | Assignment | |
|---|---|---|
| | **Analogue Control** | **Bus control** |
| 1 | Set value input + | N.C. [6] |
| 2 | Set value input GND | N.C. |
| 3 | Actual value output + | N.C. |
| 4 | Binary input 2 | |
| 5 | 12V-Output<br>(only for internal company use) | |
| 6 | RS232 TxD<br>(direct connection to computer) | |
| 7 | Binary input 1 | |
| 8 | GND (for binary inputs) | |
| 9 | only company internal use<br>(do not connect!) | |
| 10 | 12V-Output<br>(only for internal company use) | |
| 11 | 12V-Output<br>(only for internal company use) | |
| 12 | Binary input 3 | |
| 13 | Actual value output GND | N.C. |
| 14 | RS232 RxD<br>direct connection to computer) | |
| 15 | DGND<br>(for RS232-interface) | |

[6] N.C.: not connected (not used)

Note:

– Optional Pin 1 and 2 with bus version as transmitter input possible

– The cable length for RS232/ Setpoint and flow value signal is limited to 30 meters.

**Socket M16, round, 8-pin**

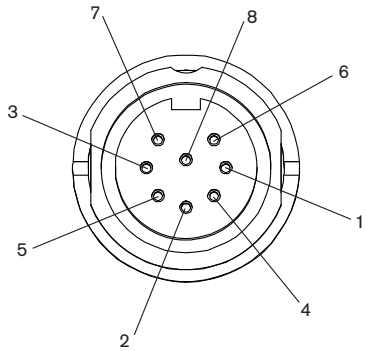


| Pin | Assignment |
|---|---|
| 1 | 24V-Supply + |
| 2 | Relay 1 – reference contact |
| 3 | Relay 2 – reference contact |
| 4 | Relay 1 – normally closed |
| 5 | Relay 1 – normally opened |
| 6 | 24V-Supply GND |
| 7 | Relay 2 – normally opened |
| 8 | Relay 2 – normally closed |

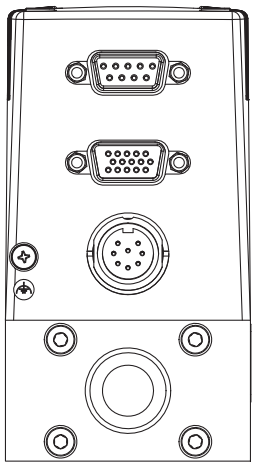

Fieldbus D-SUB

**Socket D-Sub 9-pin**
(only with fieldbus version)

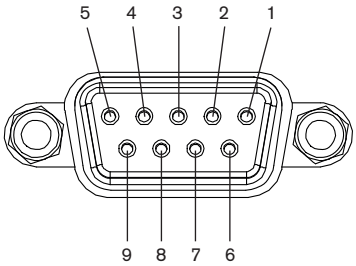


| Pin | Assignment | |
|---|---|---|
| | **PROFIBUS DP** | **DeviceNet/ CANopen** |
| 1 | Shield | Shield |
| 2 | N.C. | CAN-L<br>data line |
| 3 | RxD/TxD - P (B-line) | GND |
| 4 | RTS<br>(control signal for repeater) | N.C. |
| 5 | GND | N.C. |
| 6 | VDD (only for termination resistor) | N.C. |
| 7 | N.C. | CAN-H data line |
| 8 | RxD/TxD - N (A-line) | N.C. |
| 9 | N.C. | N.C. |

## Pin Assignment *(continued)*

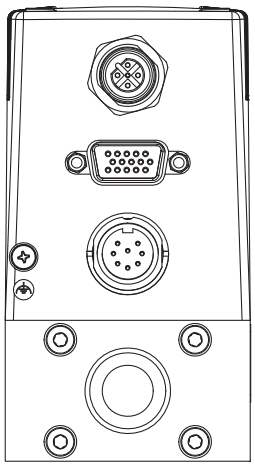

M12 Profibus

| PROFIBUS DP – socket B-coded M12 (DPV1 max. 12 Mbaud) | Pin | Assignment |
|---|---|---|
| 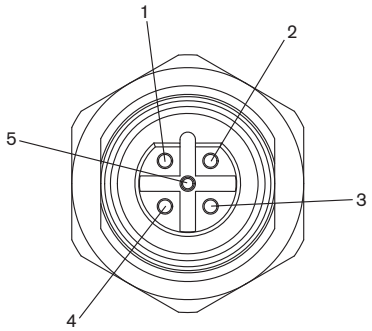 | 1 | VDD (only for termination resistor) |
| | 2 | RxD/TxD – N (A-line) |
| | 3 | DGND |
| | 4 | RxD/TxD – P (B-line) |
| | 5 | N.C. |

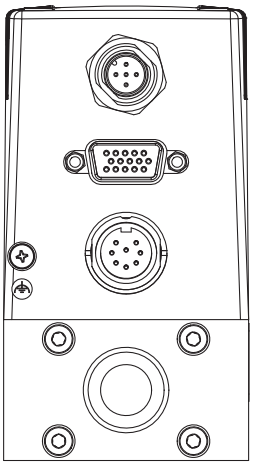

M12 DeviceNet

| DeviceNet/ CANopen – Plug A-coded M12 | Pin | Assignment |
|---|---|---|
| 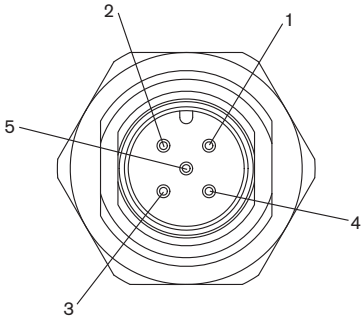 | 1 | Shield |
| | 2 | N.C. [7] |
| | 3 | DGND |
| | 4 | CAN_H |
| | 5 | CAN_L |

[7] Optional configuration with 24V DC possible for power supply via fieldbus connector. With this no power supply connection on round M16 plug needed.

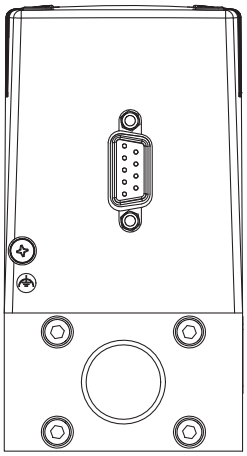

RS485 version

| Plug D-Sub 9-pin | Pin | Assignment |
|---|---|---|
| 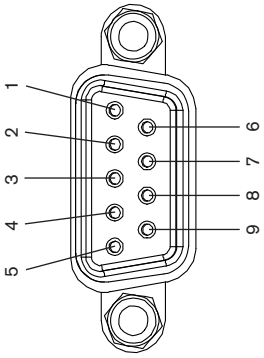 | 1 | Binary input (related to GND Pin 2) |
| | 2 | GND |
| | 3 | Power supply +24V DC |
| | 4 | Relay, normally opened |
| | 5 | Relay, normally closed |
| | 6 | TX+ (RS485-Y) – bridge with pin 9 at half duplex |
| | 7 | TX- (RS485-Z) – bridge with pin 8 at half duplex |
| | 8 | RX- (RS485-B) |
| | 9 | RX+ (RS485-A) |

## Dimensions [mm]

### MFC 8626 with valve type 2833 (9W coil)

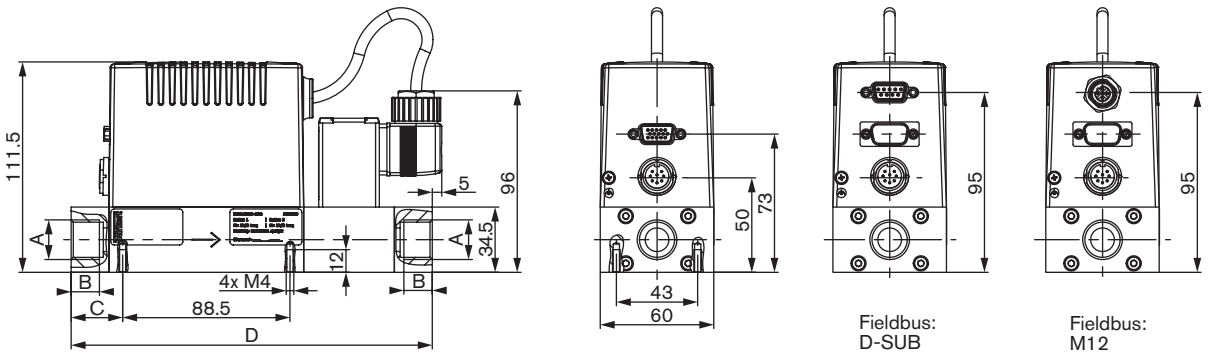


| A | B | C | D |
|---|---|---|---|
| G 1/4; NPT 1/4 | 10 | 22.25 | 181 |
| G 3/8; NPT 3/8 | 11 | 22.25 | 181 |
| G 1/2; NPT 1/2 | 14 | 27.25 | 191 |
| G 3/4; NPT 3/4 | 15 | 27.25 | 191 |

### MFC 8626 with valve type 2833 (9W coil) and base block for large nominal flow rates

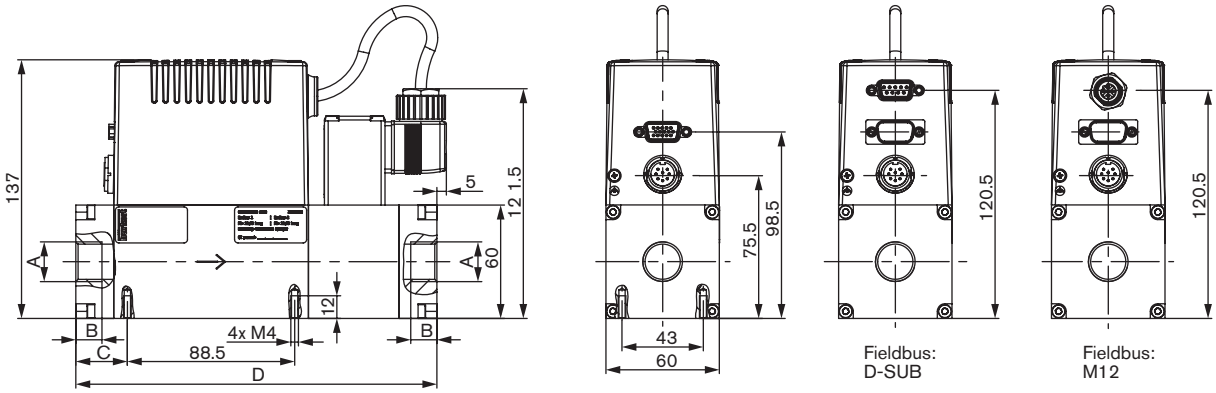


| A | B | C | D |
|---|---|---|---|
| G 3/8; NPT 3/8 | 12 | 27.25 | 191 |
| G 1/2; NPT 1/2 | 14 | 27.25 | 191 |
| G 3/4; NPT 3/4 | 15 | 27.25 | 191 |

## Dimensions [mm]

### MFC 8626 with valve type 2835 (16W coil)

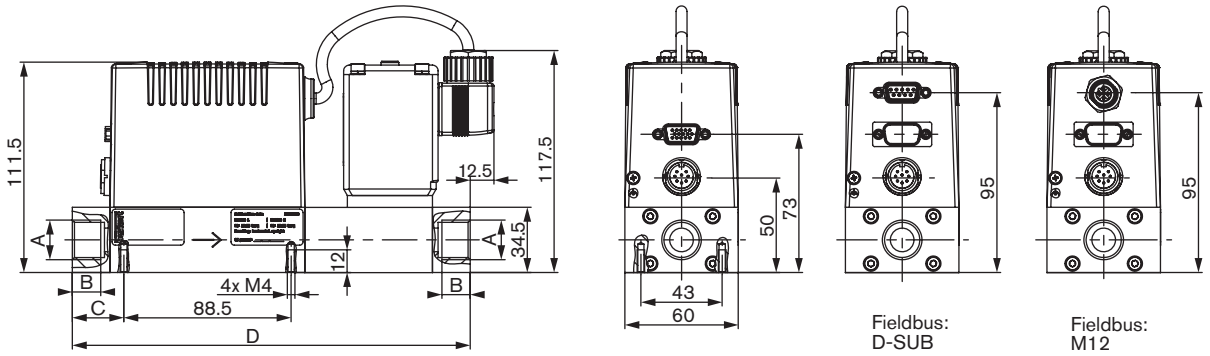


| A | B | C | D |
|---|---|---|---|
| G 1/4; NPT 1/4 | 10 | 22.25 | 200.5 |
| G 3/8; NPT 3/8 | 11 | 22.25 | 200.5 |
| G 1/2; NPT 1/2 | 14 | 27.25 | 210.5 |
| G 3/4; NPT 3/4 | 15 | 27.25 | 210.5 |

### MFC 8626 with valve type 2835 (16W coil) and base block for large nominal flow rates

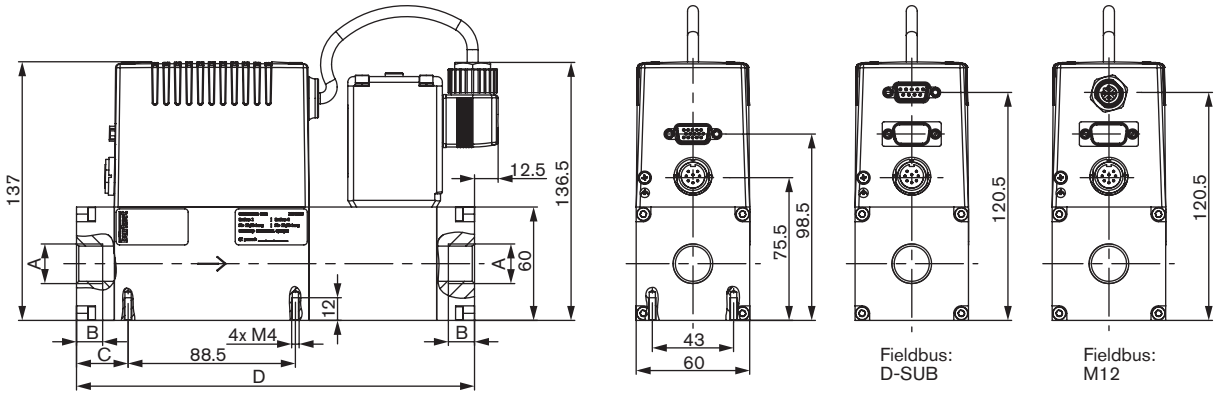


| A | B | C | D |
|---|---|---|---|
| G 3/8; NPT 3/8 | 12 | 27.25 | 210.5 |
| G 1/2; NPT 1/2 | 14 | 27.25 | 210.5 |
| G 3/4; NPT 3/4 | 15 | 27.25 | 210.5 |

## Dimensions [mm]

### MFC 8626 with valve type 6024 (18W coil)

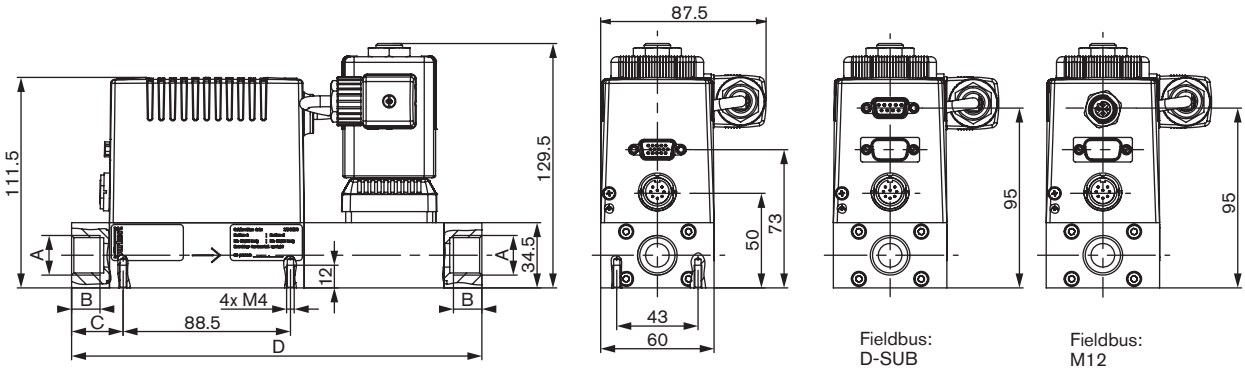


| A | B | C | D |
|---|---|---|---|
| G 1/4; NPT 1/4 | 10 | 22.25 | 207 |
| G 3/8; NPT 3/8 | 11 | 22.25 | 207 |
| G 1/2; NPT 1/2 | 14 | 27.25 | 217 |
| G 3/4; NPT 3/4 | 15 | 27.25 | 217 |

### MFC 8626 with valve type 6024 (18W coil) and base block for large nominal flow rates

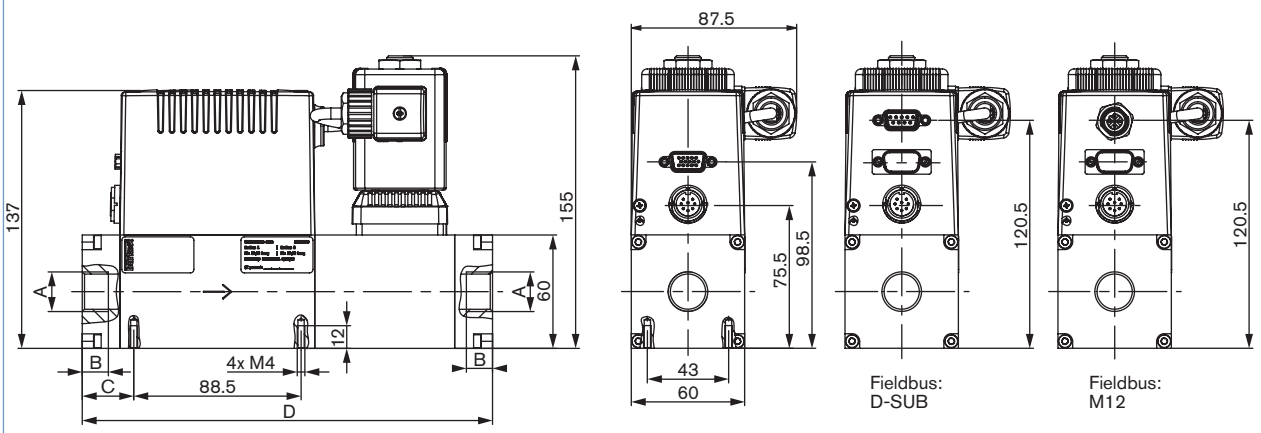


| A | B | C | D |
|---|---|---|---|
| G 3/8; NPT 3/8 | 12 | 27.25 | 217 |
| G 1/2; NPT 1/2 | 14 | 27.25 | 217 |
| G 3/4; NPT 3/4 | 15 | 27.25 | 217 |

## Dimensions [mm]

### MFC 8626 with valve type 2836 (24W coil)

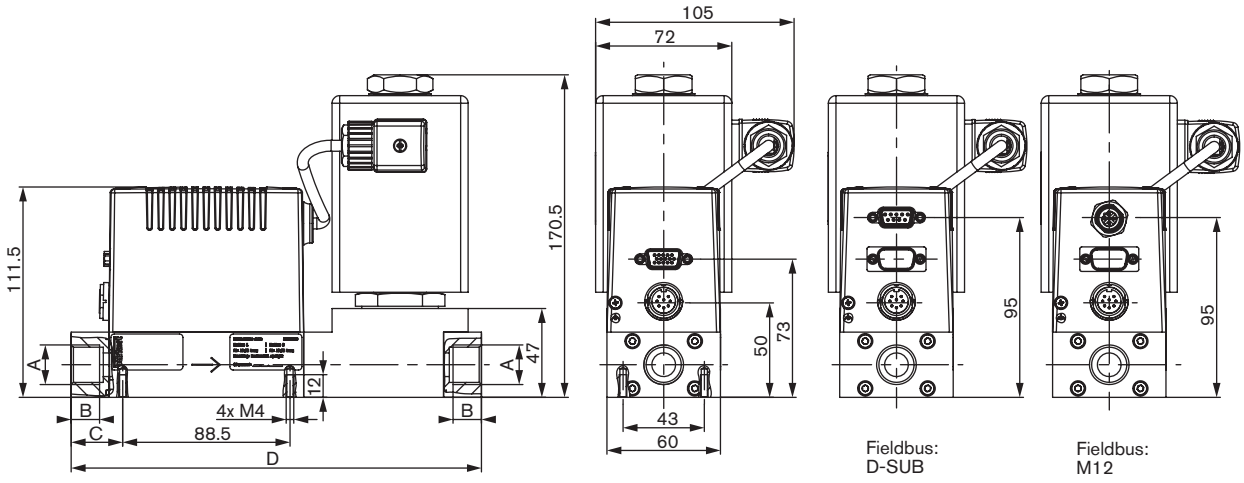


| A | B | C | D |
|---|---|---|---|
| G 1/4; NPT 1/4 | 10 | 22.25 | 207 |
| G 3/8; NPT 3/8 | 11 | 22.25 | 207 |
| G 1/2; NPT 1/2 | 14 | 27.25 | 217 |
| G 3/4; NPT 3/4 | 15 | 27.25 | 217 |

### MFC 8626 with valve type 2836 (24W coil) and base block for large nominal flow rates

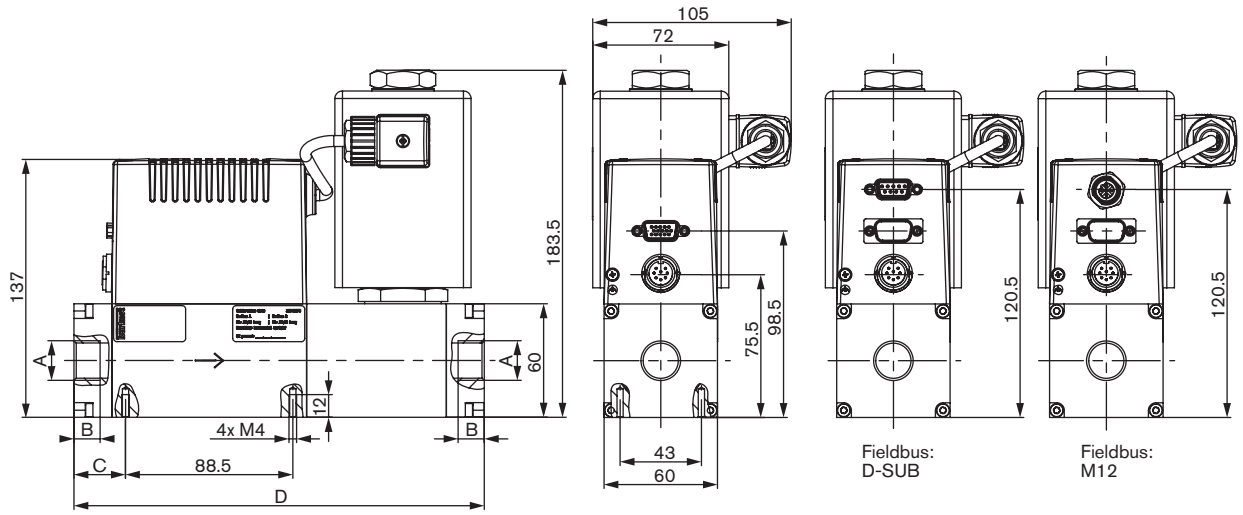


| A | B | C | D |
|---|---|---|---|
| G 3/8; NPT 3/8 | 12 | 27.25 | 217 |
| G 1/2; NPT 1/2 | 14 | 27.25 | 217 |
| G 3/4; NPT 3/4 | 15 | 27.25 | 217 |

bürkert

**Note**
You can fill out the fields directly in the PDF file before printing out the form.

# MFC/MFM Applications – Request for Quotation

## Please complete and send to your nearest Bürkert sales centre

| | |
|---|---|
| Company | Contact person |
| Customer No | Department |
| Address | Tel./Fax |
| Postcode/Town | E-mail |

☐ **MFC-Application** ☐ **MFM-Application** ☐ **Quantity** ☐ **Required delivery date**

## Fluid data

**Type of gas (or gas proportion in mixtures)** ☐

**Density** ☐ kg/m³ 8)

**Gas temperature** ☐ °C ☐ °F

**Moisture content** ☐ g/m³

**Abrasive components/solid particles** ☐ no ☐ yes, as follows: ☐

## Fluidic data

**Flow range $Q_{nom}$** ☐ Min. ☐ $l_N$/min 8) ☐ $l_S$/min (slpm) 9)

☐ Max. ☐ $m_N^3$/h 8) ☐ kg/h

☐ $cm_N^3$/min 8) ☐ $cm_S^3$/min (sccm) 9)

☐ $l_N$/h 8) ☐ $l_S$/h 9)

**Inlet pressure at $Q_{nom}$** 10) **$p_1$=** ☐ bar(g) ■

**Outlet pressure at $Q_{nom}$** **$p_2$=** ☐ bar(g) ■

**Max. inlet pressure $p_{1max}$** ☐ bar(g) ■

**MFC/MFM port connection** ☐ without screw-in fitting

☐ 1/4" G-thread (DIN ISO 228/1) ☐ 1/4" NPT-thread (ANSI B1.2)

☐ 3/8" G-thread (DIN ISO 228/1) ☐ 3/8" NPT-thread (ANSI B1.2)

☐ 1/2" G-thread (DIN ISO 228/1) ☐ 1/2" NPT-thread (ANSI B1.2)

☐ 3/4" G-thread (DIN ISO 228/1) ☐ 3/4" NPT-thread (ANSI B1.2)

☐ with screw-in fitting

☐ mm Pipeline (external Ø)

☐ inch Pipeline (external Ø)

**Installation** ☐ horizontal, valve upright (standard) ☐ horizontal, valve on side

☐ vertical, flow upwards ☐ vertical, flow downwards

**Ambient temperature** ☐ °C

## Material data

**Body (base block)** ☐ Aluminium (anodised) ☐ Stainless steel

**Seal material** ☐ FKM ☐ EPDM

## Electrical data

| **Signals for set point and actual value** | **Standard signal** Setpoint / Actual value | **with fieldbus** | **with RS485** |
|---|---|---|---|
| | ☐ 0-5 V ☐ 0-20 mA<br>☐ 0-10 V ☐ 4-20 mA | ☐ PROFIBUS DP ☐ D-Sub<br>☐ DeviceNet ☐ M12<br>☐ CANopen | ☐ D-Sub |

■ Please quote all pressure values as overpressures with respect to atmospheric pressure [bar(ü)]

zurücksetzen

8) at: 1,013 bar(a) and 0°C 9) at: 1.013 bar (a) and 20°C 10) matches with calibration pressure

**To find your nearest Bürkert facility, click on the orange box** →

In case of special application conditions, please consult for advice.

Subject to alteration.

© Christian Bürkert GmbH & Co. KG

1510/6_EU-en_00891821

bürkert
FLUID CONTROL SYSTEMS

# Mass Flow Controller (MFC) for Gases

- Bypass MFC with capillary technology for nominal flow rates from 5 $ml_N$/min to 15 $l_N$/min
- Applicable for aggressive gases
- Fieldbus option

Type 8710 can be combined with...

**Type 8619**
Multichannel program controllerr

**Type 0330**
3/2 or 2/2-way solenoid valve

**Type 6013**
2/2-way solenoid valve

Type 8710 controls the mass flow of gases through a sensor element which is not in direct contact with the gas itself. The measured value provided by the sensor (see the description on page 2) will be compared in the digital control electronics with the predefined set point according to the signal; if a control difference is present, the control value output to the proportional valve will be modified using a PI control algorithm. In this way, the mass flow can be maintained at a fixed value or a predefined profile can be followed, regardless of pressure variations or other changes in the system.

The control element, a proportional valve working at low friction, guarantees a high sensitivity and a excellent control characteristics of the unit. The MassFlowCommunicator software can be used for parameterisation and diagnosis.
Typical application areas are gas dosing or rather the production of gas mixtures in:

- Heat treating,
- Melting treatment,
- Environmental technology,
- Material coating

## Technical data

| | |
|---|---|
| **Full scale ranges**[1] ($Q_{nom}$) | 5 to 15000 $ml_N$/min[2]<br>$N_2$ equivalent |
| **Control range** | 1:50 |
| **Operating gases** | Neutral, or aggressive gases |
| **Calibration gas** | Operating gas or air with conversion factor |
| **Max. operating pressure** (Inlet pressure) | 10 bar (145 psi),<br>depending on the orifice of the valve |
| **Medium temperature** | -10 to +70°C<br>(-10 to +60°C for oxygen) |
| **Ambient temperature** | -10 to +50°C, others on request |
| **Accuracy** | ±1.5% o.R. ±0.3% F.S.<br>(after 30min. warm-up time) |
| **Repeatability** | ±0.1% F.S. |
| **Settling time ($t_{95\%}$)** | <3 s |
| **Materials**<br>Body<br>Housing<br>Seals | <br>Stainless steel<br>PC (Polycarbonate) or metal<br>FKM, EPDM, FFKM |
| **Port connections** | NPT 1/4, G 1/4, Screw-in fitting or sub-base, others on request |
| **Control valve** (proportional valve)<br>Valve orifice<br>$k_{VS}$-value | Normally closed<br>0.05 to 2.0 mm<br>0.00006 to 0.09 m³/h |
| **Electr. connection** | D-Sub plug 15-pin<br>with PROFIBUS-DP: Socket M12 5-pin<br>with DeviceNet, CANopen: Socket M12 5-pin |
| **Power supply** | 24V DC |

| | |
|---|---|
| **Voltage tolerance** | ±10 % |
| **Residual ripple** | <2 % |
| **Power consumption** | Max. 3.5-10 W (depends on proportional vale) |
| **Input signal**<br>Input impedance | 0-5 V, 0-10 V, 0-20 mA or 4-20 mA<br>> 20 kΩ (voltage),<br>< 300 Ω (current) |
| **Output signal**<br>Max. current (voltage output)<br>Max. load (current output) | 0-5 V, 0-10 V, 0-20 mA or 4-20 mA<br>10 mA<br>600 Ω |
| **Digital communication**<br>via adapter possible: | RS232, Modbus RTU (via RS adapter)<br>RS485, RS422 or USB<br>(see accessories table on p. 3) |
| **Fieldbus option** | PROFIBUS-DP, DeviceNet, CANopen |
| **Protection class** | IP40 |
| **Dimensions [mm]** | See drawings on pages 5 and 6 |
| **Total weight** | ca. 850 g (stainless steel) |
| **Mounting position** | Horizontal or vertical |
| **Light emitting diode display** (default, other allocations possible) | Indication for Power, Limit (with analog signals) / Communication (with fieldbus),<br>Error |
| **Binary input** (default, other functions possible) | Two<br>1. Start autotune<br>2. Not assigned |
| **Binary output** (default, other functions possible) | One relay-output for<br>1. setpoint not reached,<br>Max. load: 25V, 1A, 25VA |

[1] The nominal flow value is the max. flow value calibrated which can be controlled. The nominal flow range defines the range of nominal flow rates (full scale values) possible.
[2] Index N: Flow rates referred to 1.013 bar and 0° C.
Alternatively there is an Index S available which refers to 1.013 bar and 20° C

## Measuring principle

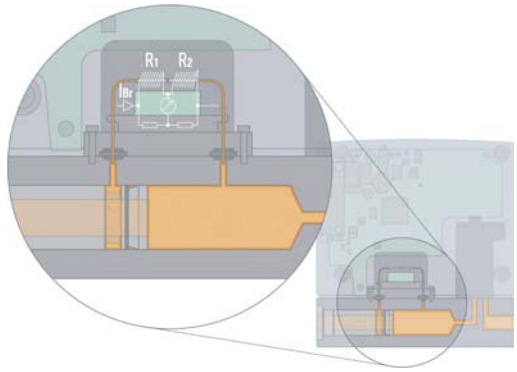


The measurement is based on the bypass principle. A laminar flow element in the main channel generates a small pressure drop. This drives a small flow, proportional to the main flow, through the bypass (sensor tube).

Two heating resistors, which are connected in a measuring bridge, are wounded on this stainless steel tube. In the zero-flow state, the bridge is balanced, but with flow, heat is transported in the flow direction and the bridge becomes unbalanced.

The dynamics of the measurement is limited by the tube walls, which act as a thermal barrier. Through use of suitable software in the controller, response times are obtained (in the range of a few seconds) that are adequate for a wide range of applications.

With contaminated gases we recommend to install filter elements upstream. This avoids changes in the division ratio between main flow and sensor tube, as well as changes in the heat transmission caused by deposits on the walls of the sensor tube.

With these sensors even aggressive gases can be controlled, because all essential parts in contact with the gas are fabricated in stainless steel. With this sensor principle it is also possible to convert between different gases.

**$Q(Gas) = f \times Q(N_2)$**

| gas | factor f |
|---|---|
| $N_2$ | 1.00 |
| Luft | 1.00 |
| $O_2$ | 0.98 |
| $H_2$ | 1.01 |
| Ar | 1.4 |
| He | 1.42 |
| $CO_2$ | 0.77 |

By using the gas factors it is possible that the accuracy is not within the datasheet specification.
For applications which need high accuracy it is recommended to calibrate under application conditions.

The compatibility of the sealing materials of the MFCs should be checked before use with another gas.

## Notes regarding the selection of the unit

For the proper choice of the actuator orifice within the MFC, not only the required maximum flow rate $Q_{nom}$, but also the pressure values *directly* before and after the MFC ($p_1$, $p_2$) at this flow rate $Q_{nom}$ should be known. In general, these pressures are not the same as the overall inlet and outlet pressures of the whole plant, because usually there are additional flow resistors (tubing, additional shut-off valves, nozzles etc.) present both before and after the controller.

Please use the request for quotation form on p. 5 to indicate the pressures *directly* before and after the MFC. If these should be unknown or not accessible to a measurement, estimates are to be made by taking into account the approximate pressure drops over the flow resistors before and after the MFC, respectively, at a flow rate of $Q_{nom}$.
In addition, please quote the maximum inlet pressure $p_{1max}$ to be encountered. This data is needed to make sure the actuator is able to provide a close-tight function within all the specified modes of operation.

**The request for quotation form on page 7 contains the relevant fluid specification. Please use in this way the experience of Bürkert engineers already in the design phase and provide us with a copy of the request containing the data of your application together with your inquiry or order.**

## Ordering Chart for Accessories

| Article | Item No. | |
|---|---|---|
| **Connections/Cables** | | |
| Socket D-Sub 15-pin solder connection | 918 274 | |
| Hood for D-Sub socket, with screw locking | 918 408 | |
| Socket D-Sub 15-pin with 5m cable | 787 737 | |
| Socket D-Sub 15-pin with 10m cable | 787 738 | |
| **Adapters** [3] | | |
| RS232 adapter | 654 748 | |
| PC extension cable for RS232 9-pin socket/plug 2 m | 917 039 | |
| RS422 adapter (RS485 compatible) | 666 371 | |
| USB adapter (Version 1.1, USB socket type B) | 670 639 | |
| USB connection cable 2 m | 772 299 | |
| Communication software MassFlowCommunicator | Download from | |
| **Accessories for Fieldbus** | **PROFIBUS DP (B-coded)** | **DeviceNet, CANopen (A-coded)** |
| Plug M12 [4] | 918 198 | 917 115 |
| Socket M12 (coupling) [4] | 918 447 | 917 116 |
| Y-junction [4] | 902 098 | 788 643 |
| Shut-off resistor | 902 553 | (on request) |
| GSD-File (PROFIBUS), EDS-File (DeviceNet, CANopen) | Download from | |

[3] The adapters serve mainly for initial operation or diagnosis. Those are not obligatory for continuous operation.
[4] The two M12 connectors as listed above cannot be used together on the same side of the Y-junction. At least one of the two M12 connections needs to be a prefabricated cable which uses typically a thinner connector.

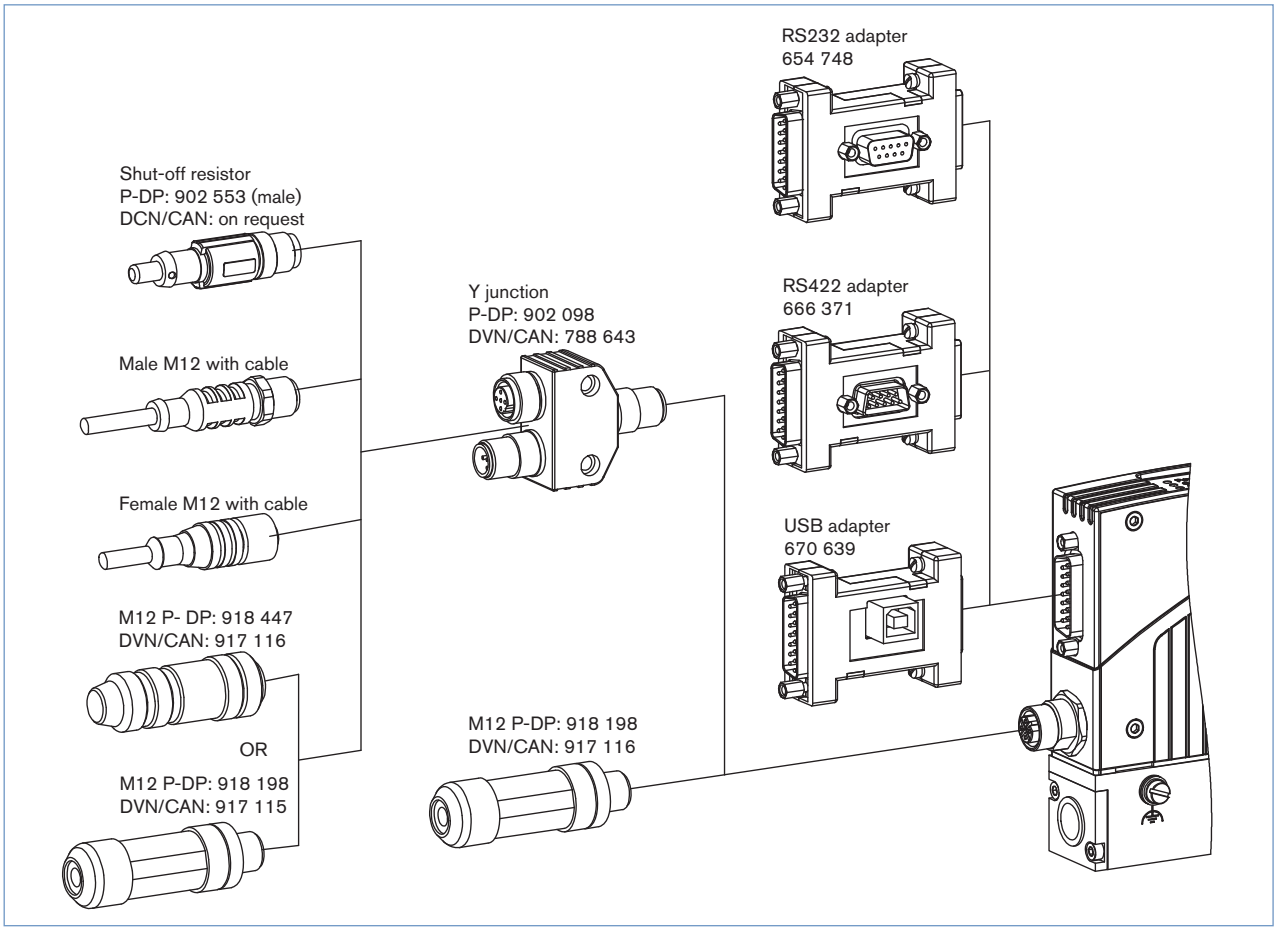

## Pin Assignment

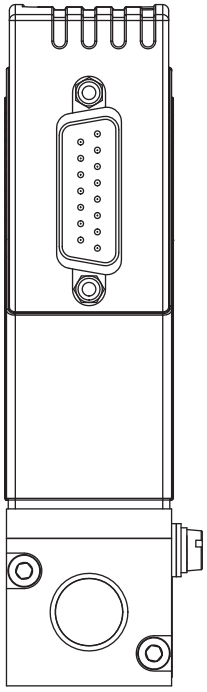

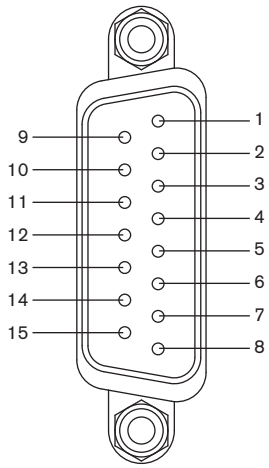


| Plug D-Sub, 15-pin | Pin | Assignment | |
|---|---|---|---|
| | | Analogue Control | Bus control |
| | 1 | Relay – normally closed | |
| | 2 | Relay – normally open | |
| | 3 | Relay – middle contact | |
| | 4 | GND for 24V-Supply and Binary inputs | |
| | 5 | 24V-Supply + | |
| | 6 | Only for internal company use | |
| | 7 | Set value input GND | N.C. [5] |
| | 8 | Set value input + | N.C. |
| | 9 | Actual value output GND | N.C. |
| | 10 | Actual value output + | N.C. |
| | 11 | DGND (for RS232) [6] | |
| | 12 | Binary input 1 | |
| | 13 | Binary input 2 | |
| | 14 | RS232 RxD (without driver) [6] | |
| | 15 | RS232 TxD (without driver) [6] | |

[5] N.C.: not connected (not used)

Note:
- Optional Pin 7 and 8 with bus version as transmitter input possible
- The cable length for RS232/ Setpoint and actual value signal is limited to 30 meters.

[6] Driving RS232 interface only by RS232 adapter including an adaption of TTL levels

### With Fieldbus Version:

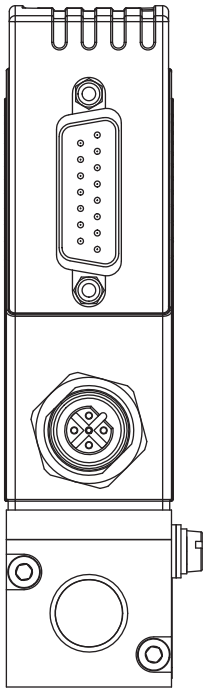

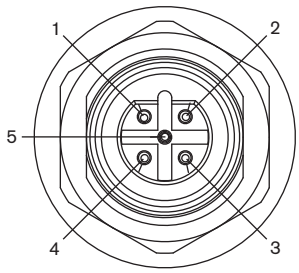


| PROFIBUS DP – socket B-coded M12 (DPV1 max. 12 MBaud) | Pin | Assignment |
|---|---|---|
| | 1 | VDD (only for termination resistor) |
| | 2 | RxD/ TxD – N (A-Line) |
| | 3 | DGND |
| | 4 | RxD/ TxD – P (B-Line) |
| | 5 | N.C. |

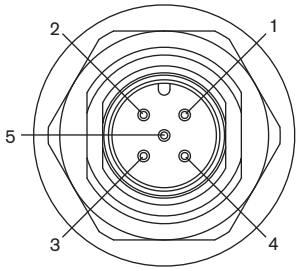


| DeviceNet, CANopen – Plug M12 | Pin | Assignment |
|---|---|---|
| | 1 | Shield |
| | 2 | N.C. |
| | 3 | DGND |
| | 4 | CAN_H |
| | 5 | CAN_L |

## Dimensions [mm]

### Standard Version

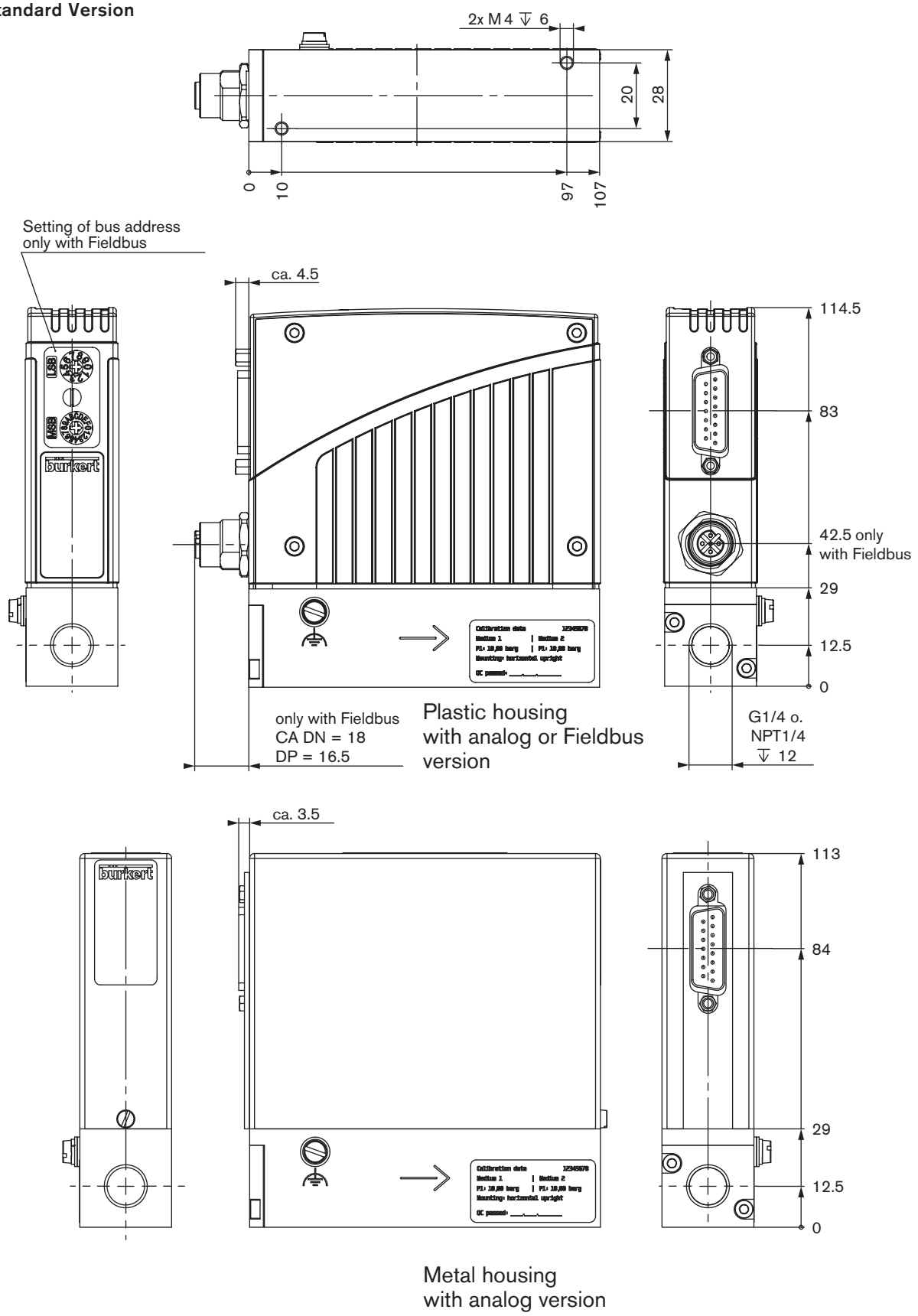

## Dimensions [mm]

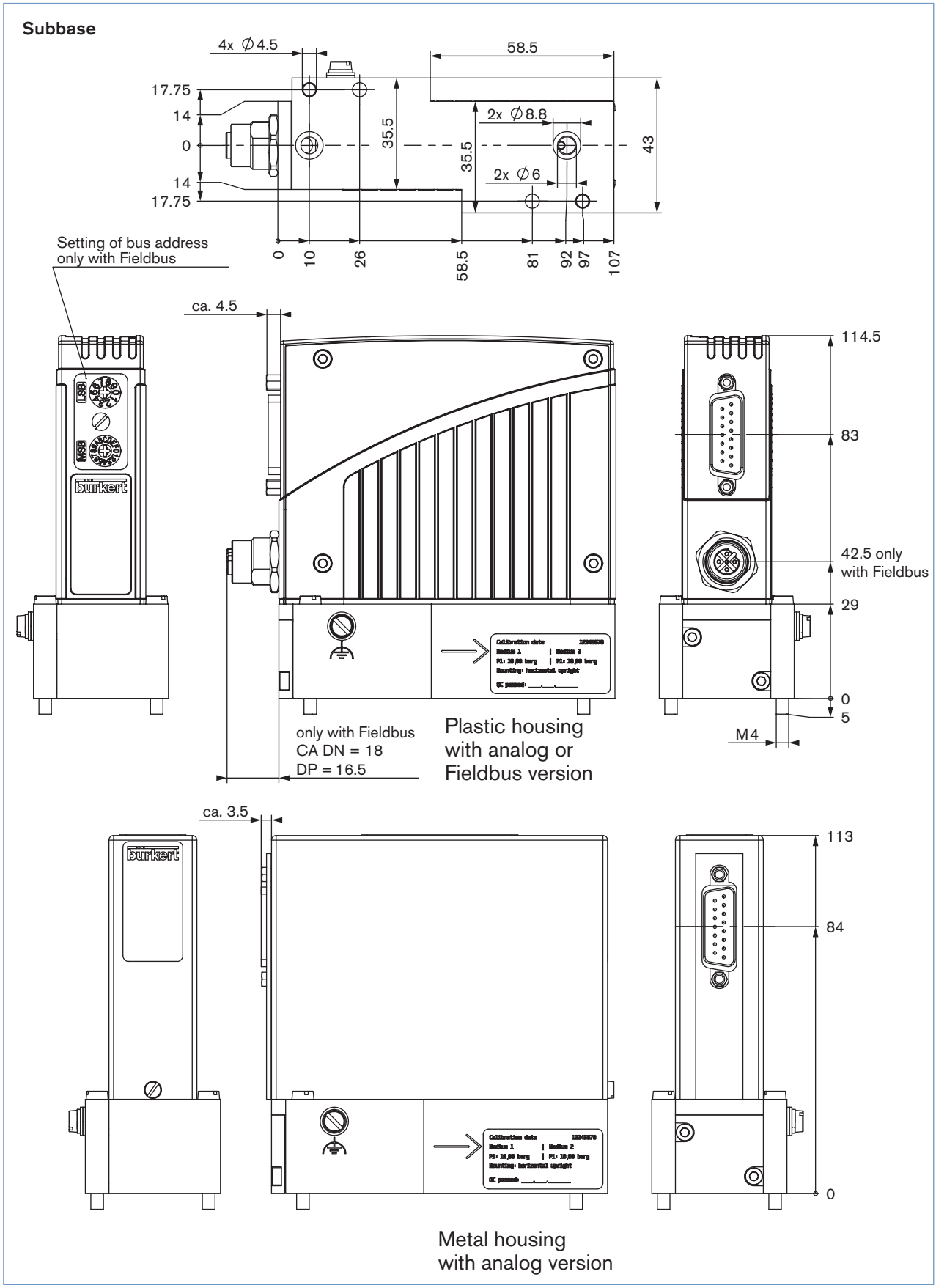

bürkert

**Note**
You can fill out the fields directly in the PDF file before printing out the form.

# MFC/MFM-applications - Request for quotation

## Please complete and send to your nearest Bürkert sales centre

| | |
|---|---|
| Company | Contact person |
| Customer No | Department |
| Address | Tel./Fax |
| Postcode/Town | E-mail |

☐ **MFC-Application** ☐ **MFM-Application** ☐ **Quantity** ☐ **Required delivery date**

## Medium data

**Type of gas (or gas proportion in mixtures)** ☐

**Density** ☐ kg/m³ 7)

**Gas temperature [°C or °F]** ☐ °C ☐ °F

**Moisture content** ☐ g/m³

**Abrasive components/solid particles** ☐ no ☐ yes, as follows: ☐

## Fluidic data

**Flow range $Q_{nom}$** ☐ Min. ☐ $l_N$/min 7) ☐ $l_S$/min (slpm) 8)
☐ Max. ☐ $m_N^3$/h 7) ☐ kg/h
☐ $cm_N^3$/min 7) ☐ $cm_S^3$/min (sccm) 8)
☐ $l_N$/h 7) ☐ $l_S$/h 8)

**Inlet pressure at $Q_{nom}$** 9) $p_1$= ☐ bar(g) ■

**Outlet pressure at $Q_{nom}$** $p_2$= ☐ bar(g) ■

**Max. inlet pressure $P_{1max}$** ☐ bar(g) ■

**MFC/MFM port connection**
☐ without screw-in fitting
☐ 1/4" G-thread (DIN ISO 228/1)
☐ 1/4" NPT-thread (ANSI B1.2)
☐ with screw-in fitting (acc. to specification for pipeline)
☐ mm Pipeline (external Ø)
☐ inch Pipeline (external Ø)
☐ Flange version

**Installation**
☐ horizontal
☐ vertical, flow upwards ☐ vertical, flow downwards

**Ambient temperature** ☐ °C

## Material data

**Body** ☐ Stainless steel

**Housing** ☐ Plastic ☐ Metal (not with type 8712/8702 and not with fieldbus)

**Seal** ☐ FKM ☐ EPDM ☐ FFKM

## Electrical data

**Signals for set point and actual value**

| **with standard signal** | | **with fieldbus** | |
|---|---|---|---|
| Setpoint | actual value | | |
| ☐ 0-5 V | ☐ 0-5 V | ☐ PROFIBUS DP | ☐ M12 |
| ☐ 0-10 V | ☐ 0-10 V | ☐ DeviceNet | ☐ D-Sub |
| ☐ 0-20 mA | ☐ 0-20 mA | ☐ CANopen | (only for type 8712/8702) |
| ☐ 4-20 mA | ☐ 4-20 mA | | |

■ Please quote all pressure values as overpressures with respect to atmospheric pressure bar(ü)

reset form

7) at: 1,013 bar(a) and 0°C 8) at: 1.013 bar (a) and 20°C 9) matches with calibration pressure

**To find your nearest Bürkert facility, click on the orange box →**

In case of special application conditions, please consult for advice.

Subject to alteration
© Christian Bürkert GmbH & Co. KG

1501/4_EU-en_00891883

bürkert
FLUID CONTROL SYSTEMS

# Mass Flow Controller (MFC) for Gases

- Direct flow measurement for nominal flow rates from 10 $ml_N$/min to 80 $l_N$/min ($N_2$) in MEMS technology
- High accuracy and repeatability
- Short settling time
- Optional fieldbus

Type 8711 can be combined with…

**Type 8619**
Multichannel program controller

**Type 0330**
2/2 or 3/2-way solenoid valve

**Type 6013**
2/2-way solenoid valve

**Type 6606**
2/2 or 3/2-way solenoid valve

Type 8711 controls the mass flow of gases that is relevant for most applications in process technologies. The measured value provided by the chip sensor (see the description on page 2) will be compared in the digital control electronics with the predefined set point according to the signal; if a control difference is present, the control value output to the proportional valve will be modified using a PI-control algorithm. Due to the fact that
the sensor is directly in contact with the gas a very fast response time of the MFC is reached. In this way, the mass flow can be maintained at a fixed value or a predefined profile can be followed, regardless of pressure variations or other changes in the system. Type 8711 can optionally be calibrated for two different gases, the user is able to switch between these two gases.

As control element a direct-acting proportional valve guarantees a high sensitivity and a good control characteristics of the MFC. The MassFlowCommunicator software can be used for parameterisation and diagnosis. Typical application areas are gas dosing or rather the production of gas mixtures in:

- Test benches
- Bio reactors
- Heat treatment
- Material coating
- Burner controls
- Fuel cell technology

## Technical Data

| | |
|---|---|
| **Nominal flow range**[1] ($Q_{nominal}$) | 10 $ml_N$/min [2] to 80 $l_N$/min ($N_2$), see table on p. 2 |
| **Turn-down ratio** | 1:50, higher turn-down ratio on request |
| **Operating gas** | Neutral, non-contaminated gases, on request |
| **Calibration gas** | Operating gas or air with conversion factor |
| **Max. operating pressure** (Inlet pressure) | 10 bar (145 psi) depending on the orifice of the valve |
| **Gas temperature** | -10 to +70°C (-10 to +60°C with oxygen) |
| **Ambient temperature** | -10 to +50°C |
| **Accuracy** | ±0.8% o.R. ±0.3% F.S. (after 1 min. warm up time) |
| **Repeatability** | ±0.1% F.S. |
| **Settling time (t95%)** | < 300 ms |
| **Materials** | |
| Body | Aluminium or stainless steel |
| Housing | PC (Polycarbonate) or metal |
| Seals | FKM, EPDM |
| **Port connection** | NPT 1/4, G 1/4, screw-in fitting or flange, others on request |
| **Regulating unit** (Proportional Valve) | Normally closed |
| Valve orifice | 0.05 to 4.0 mm |
| $k_{VS}$ value | 0.00006 to 0.32 $m^3$/h |
| **Electr. connection** Additionally with fieldbus: | Plug D-Sub 15-pin<br>with PROFIBUS-DP: Socket M12 5-pin<br>with DeviceNet, CANopen: Socket M12 5-pin |
| **Power supply** | 24V DC |

[1] The nominal flow value is the max. flow value calibrated which can be controlled. The nominal flow range defines the range of nominal flow rates (full scale values) possible.
[2] Index N: Flow rates referred to 1.013 bar and 0° C.
Alternatively there is an Index S available which refers to 1.013 bar and 20° C

| | |
|---|---|
| **Voltage tolerance** | ±10% |
| **Residual ripple** | < 2% |
| **Power consumption** | Max. 3.5–14 W (depending on proportional valve used) |
| **Input signal** Input impedance | 0–5 V, 0-10 V, 0–20 mA or 4–20 mA<br>> 20 kΩ (voltage),<br>< 300 Ω (current) |
| **Output signal** | 0–5 V, 0–10 V, 0–20 mA or 4–20 mA |
| Max. current (voltage) | 10 mA |
| Max. load (current) | 600 Ω |
| **Digital communication** via adapter possible: | RS232, Modbus RTU (via RS adapter)<br>RS485, RS422 or USB<br>(see accessories table on p. 3) |
| **Fieldbus option** | PROFIBUS-DP, DeviceNet, CANopen |
| **Protection class** | IP40 |
| **Dimensions [mm]** | see drawings 5–7 |
| **Total weight** | ca. 500 g (aluminium body) |
| **Installation** | horizontal or vertical |
| **Light emitting diodes** (default functions, other functions programmable) | Indication for power, Limit (with analog signals) / Communication (with fieldbus) and error |
| **Binary inputs** (default functions, other functions programmable) | Two<br>1. Start Autotune<br>2. not assigned |
| **Binary output** (default functions, other functions programmable) | A relay output for:<br>1. Limit (setpoint not reached)<br>Max. Load: 25V, 1A, 25VA |

## Measuring Principle

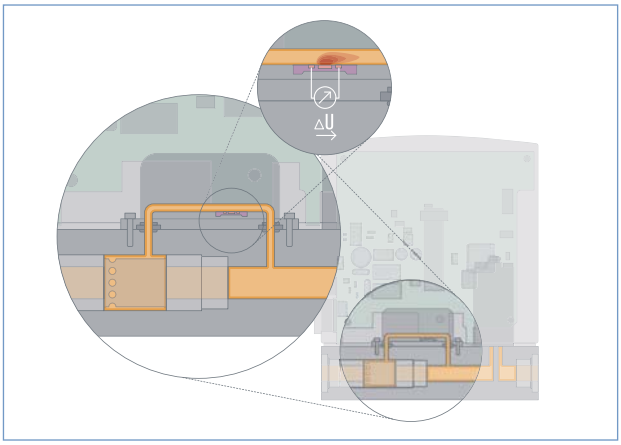

The actual flow rate is detected by a sensor. This operates according to a thermal principle which has the advantage of providing the mass flow which is independent on pressure and temperature.

A small part of the total gas stream is diverted into a small, specifically designed bypassing channel whitch ensures laminar flow conditions. The sensor element is a chip immersed into the wall of this flow channel. The chip, produced in MEMS technology, contains a heating resistor and two temperature sensors (thermopiles) which are arranged symmetrically upstream and downstream of the heater. The differential voltage of the thermopiles is a measure of the mass flow rate passing the flow sensor. The calibration procedure effectuates a unique assignment of the sensor signal to the total flow rate through the device.

## Nominal Flow Range of Typical Gases

(other gases on request)

| Gas | Min. $Q_{nom}$ [$l_N$/min] | Max. $Q_{nom}$ [$l_N$/min] |
|---|---|---|
| **Argon** | 0.01 | 80 |
| **Helium** | 0.01 | 500 |
| **Carbon dioxide** | 0.02 | 40 |
| **Air** | 0.01 | 80 |
| **Methane** | 0.01 | 80 |
| **Oxygen** | 0.01 | 80 |
| **Nitrogen** | 0.01 | 80 |
| **Hydrogen** | 0.01 | 500 |

## Notes Regarding the Configuration

For the proper choice of the actuator orifice within the MFC, not only the required maximum flow rate $Q_{nom}$, but also the pressure values *directly* before and after the MFC ($p_1$, $p_2$) at this flow rate $Q_{nom}$ should be known. In general, these pressures are not the same as the overall inlet and outlet pressures of the whole plant, because usually there are additional flow resistors (tubing, additional shut-off valves, nozzles etc.) present both before and after the controller.

Please use the request for quotation form on p. 8 to indicate the pressures *directly* before and after the MFC. If these should be unknown or not accessible to a measurement, estimates are to be made by taking into account the approximate pressure drops over the flow resistors before and after the MFC, respectively, at a flow rate of $Q_{nom}$.
In addition, please quote the maximum inlet pressure $p_{1max}$ to be encountered. This data is needed to make sure the actuator is able to provide a close-tight function within all the specified modes of operation.

**The request form on page 8 contains the relevant fluid specification. Using the experience of Bürkert engineers already in the design phase provide us with a copy of the request containing the necessary data together with your inquiry or order.**

## Ordering Chart for Accessories

| Article | Item No. | |
|---|---|---|
| **Connections/Cables** | | |
| Socket D-Sub 15-pin solder connection | 918 274 | |
| Hood for D-Sub socket, with screw locking | 918 408 | |
| Socket D-Sub 15-pin with 5m cable | 787 737 | |
| Socket D-Sub 15-pin with 10m cable | 787 738 | |
| **Adapters** [3] | | |
| RS232 adapter | 654 748 | |
| PC extension cable for RS232 9-pin socket/plug 2 m | 917 039 | |
| RS422 adapter (RS485 compatible) | 666 371 | |
| USB adapter (Version 1.1, USB socket type B) | 670 639 | |
| USB connection cable 2 m | 772 299 | |
| Communication software MassFlowCommunicator | Download from | |
| **Accessories for Fieldbus** | **PROFIBUS DP (B-coded)** | **DeviceNet, CANopen (A-coded)** |
| Plug M12 [4] | 918 198 | 917 115 |
| Socket M12 (coupling) [4] | 918 447 | 917 116 |
| Y-junction [4] | 902 098 | 788 643 |
| Shut-off resistor | 902 553 | (on request) |
| GSD-File (PROFIBUS), EDS-File (DeviceNet, CANopen) | Download from | |

[3] The adapters serve mainly for initial operation or diagnosis. Those are not obligatory for continuous operation.

[4] The two M12 connectors as listed above cannot be used together on the same side of the Y-junction. At least one of the two M12 connection needs to be a prefabricated cable which uses typically a thinner connector.

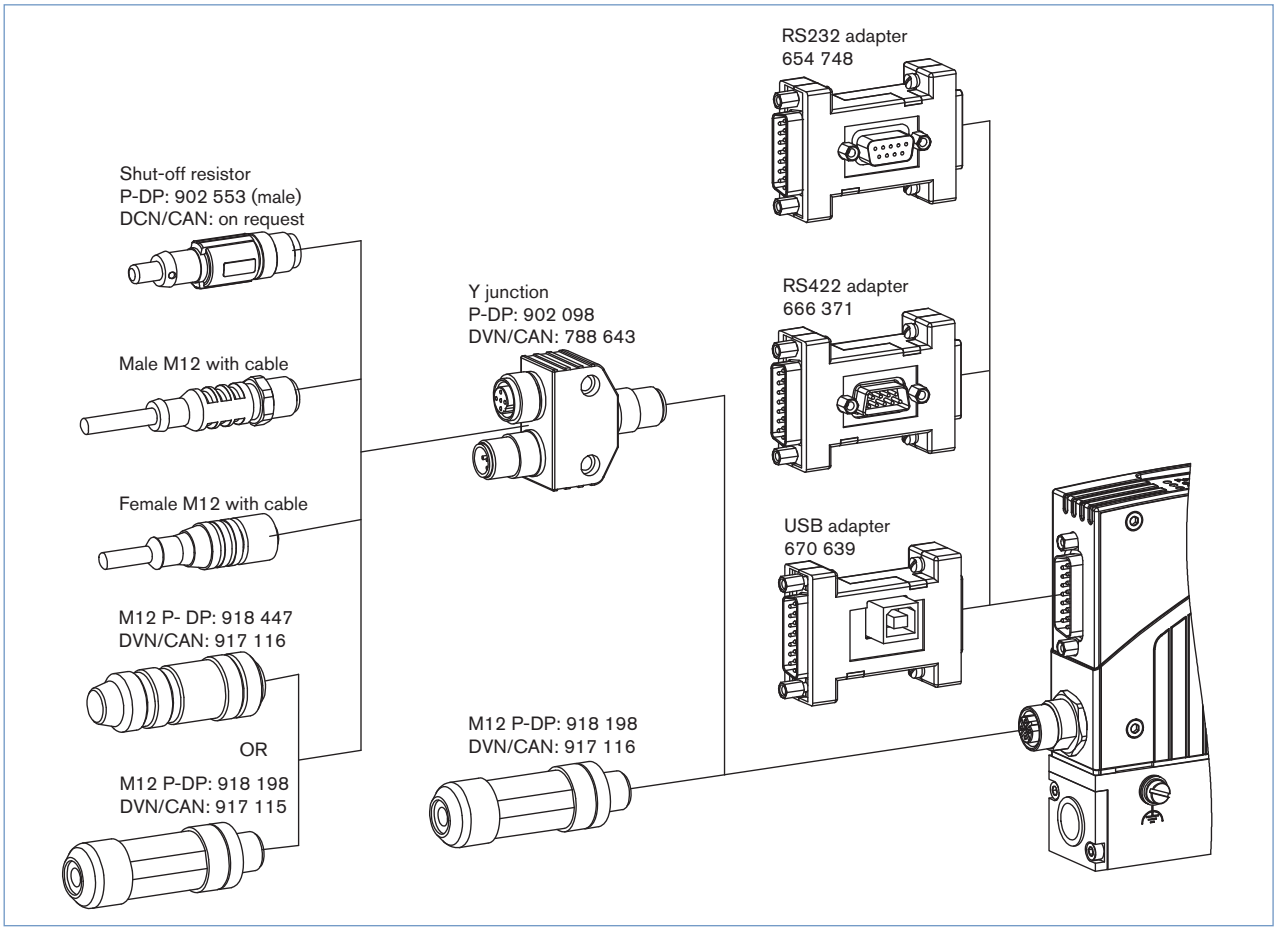

## Pin Assignment

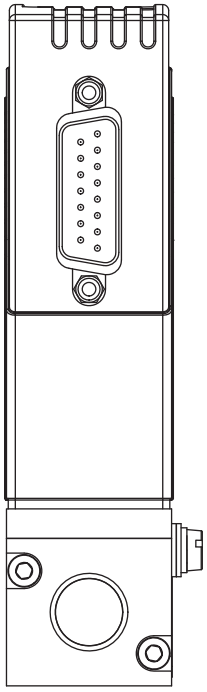

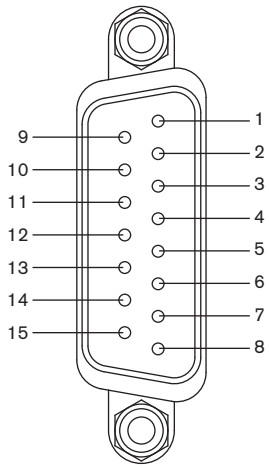


| Plug D-Sub, 15-pin | Pin | Assignment | |
|---|---|---|---|
| | | Analogue Control | Bus control |
| | 1 | Relay – normally closed | |
| | 2 | Relay – normally opened | |
| | 3 | Relay – middle contact | |
| | 4 | GND for 24V-Supply and Binary inputs | |
| | 5 | 24V-Supply + | |
| | 6 | 12V-Output (only for internal company use) | |
| | 7 | Set value input GND | N.C. [5] |
| | 8 | Set value input + | N.C. |
| | 9 | Actual value output GND | N.C. |
| | 10 | Actual value output + | N.C. |
| | 11 | DGND (for RS232) [6] | |
| | 12 | Binary input 1 | |
| | 13 | Binary input 2 | |
| | 14 | RS232 RxD (without driver) [6] | |
| | 15 | RS232 TxD (without driver) [6] | |

[5] N.C.: not connected (not used)
Note:
– Optional Pin 7 and 8 with bus version as transmitter input possible
– The cable length for RS232/ Setpoint and actual value signal is limited to 30 meters.
[6] Driving RS232 interface only by RS232 adapter including an adaption of TTL levels

### With Fieldbus Version:

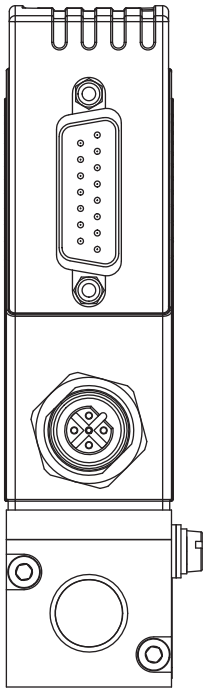

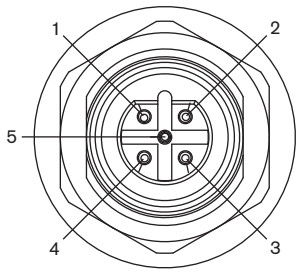


| PROFIBUS DP – socket B-coded M12 (DPV1 max. 12 MBaud) | Pin | Assignment |
|---|---|---|
| | 1 | VDD (only for termination resistor) |
| | 2 | RxD/ TxD – N (A-Line) |
| | 3 | DGND |
| | 4 | RxD/ TxD – P (B-Line) |
| | 5 | C (4) |

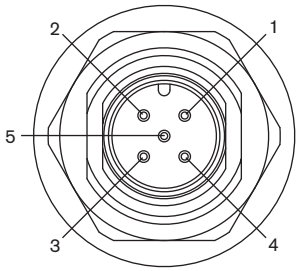


| DeviceNet, CANopen – Plug M12 | Pin | Assignment |
|---|---|---|
| | 1 | Shield |
| | 2 | N.C. [7] |
| | 3 | DGND |
| | 4 | CAN_H |
| | 5 | CAN_L |

## Dimensions [mm]

### Standard Version

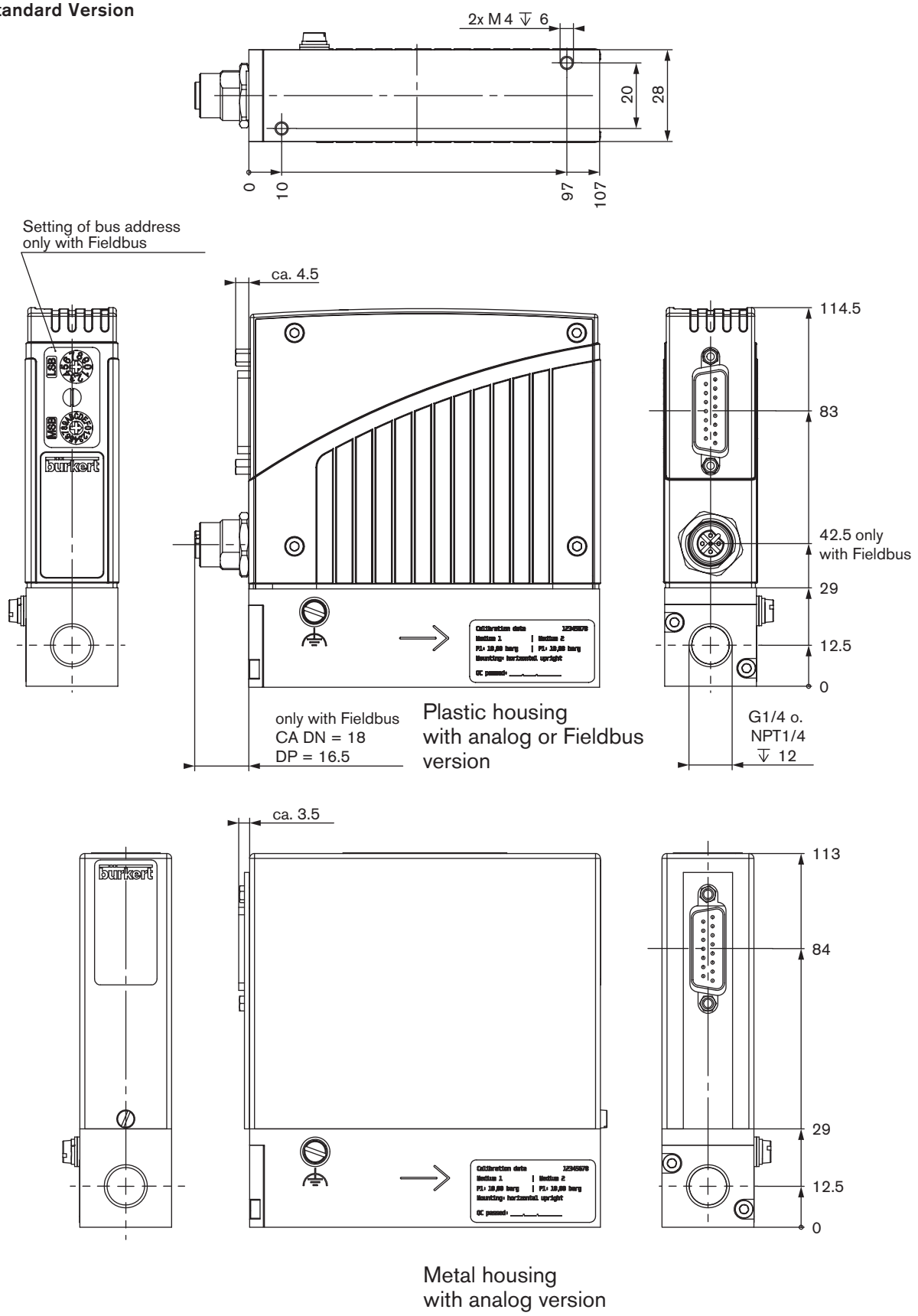

## Dimensions [mm]

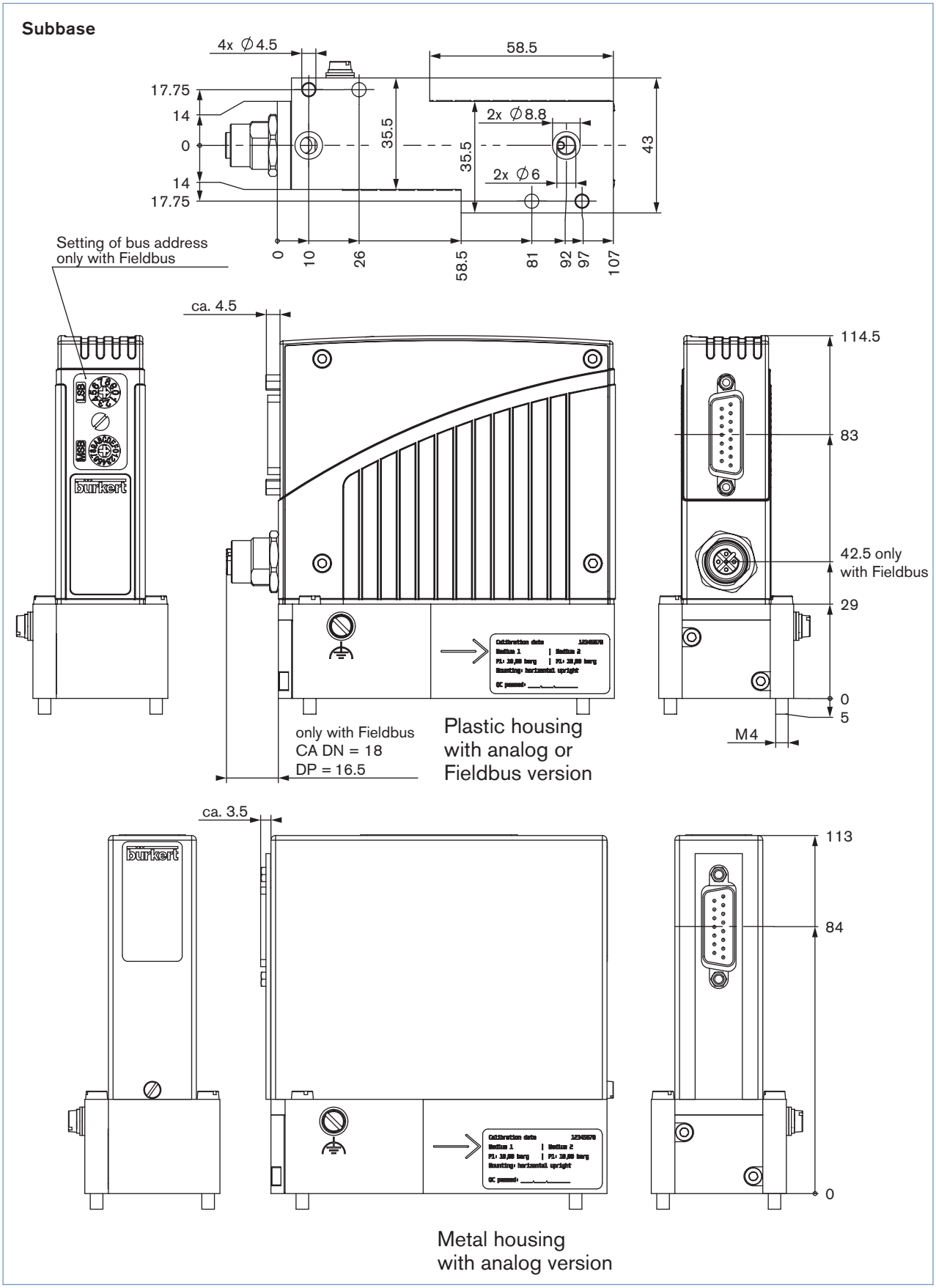

## Dimensions [mm]

### Version with external valve

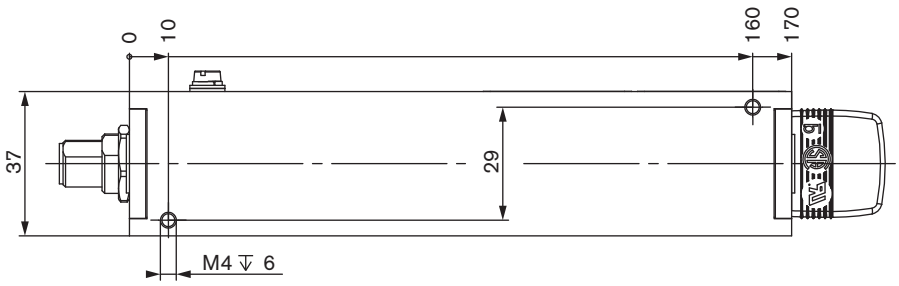


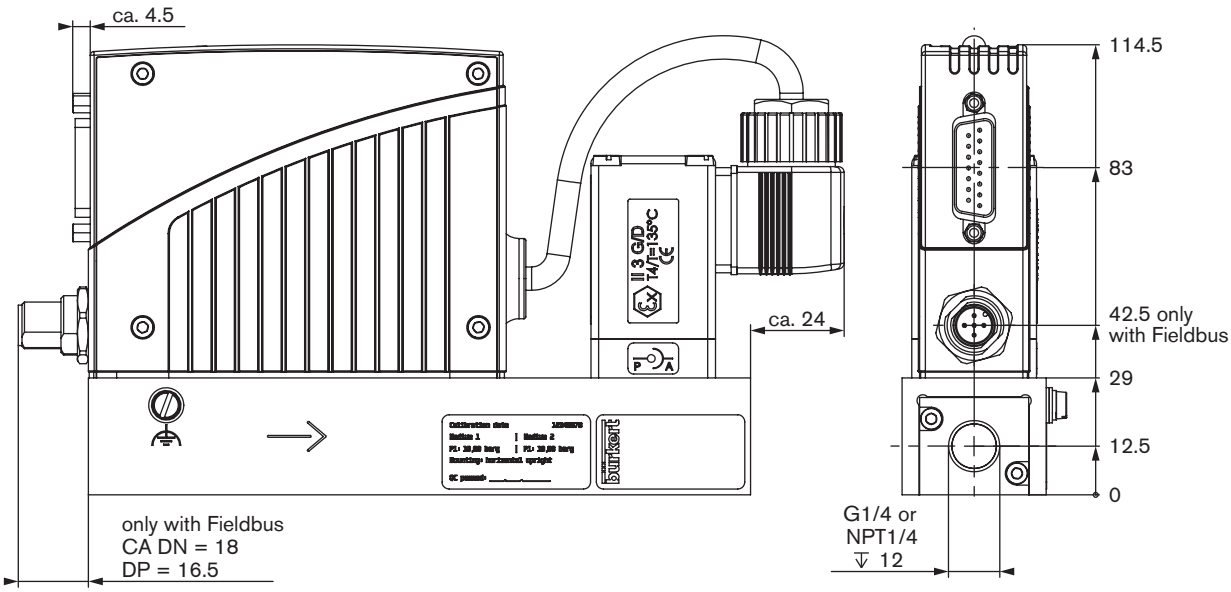


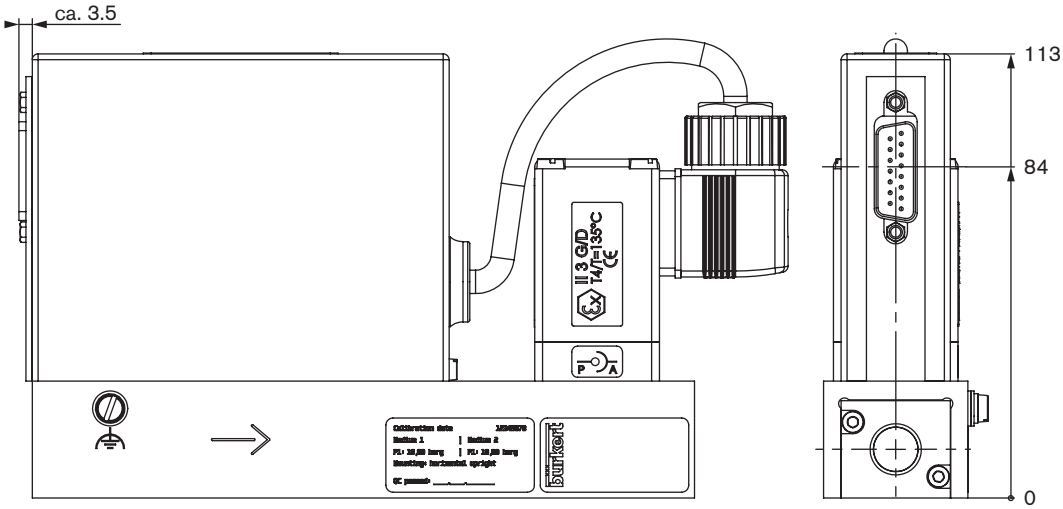

bürkert

**Note**
You can fill out the fields directly in the PDF file before printing out the form.

# MFC/MFM-applications - Request for quotation

## Please complete and send to your nearest Bürkert sales centre

| | |
|---|---|
| Company | Contact person |
| Customer No | Department |
| Address | Tel./Fax |
| Postcode/Town | E-mail |

☐ **MFC-Application** ☐ **MFM-Application** ☐ **Quantity** ☐ **Required delivery date**

## Medium data

**Type of gas (or gas proportion in mixtures)** ☐

**Density** ☐ kg/m³ 8)

**Gas temperature [°C or °F]** ☐ °C ☐ °F

**Moisture content** ☐ g/m³

**Abrasive components/solid particles** ☐ no ☐ yes, as follows: ☐

## Fluidic data

**Flow range $Q_{nom}$** ☐ Min. ☐ $l_N$/min 8) ☐ $l_S$/min (slpm) 9)
☐ Max. ☐ $m_N^3$/h 8) ☐ kg/h
☐ $cm_N^3$/min 8) ☐ $cm_S^3$/min (sccm) 9)
☐ $l_N$/h 8) ☐ $l_S$/h 9)

**Inlet pressure at $Q_{nom}$** 10) $p_1$= ☐ bar(g) ■

**Outlet pressure at $Q_{nom}$** $p_2$= ☐ bar(g) ■

**Max. inlet pressure $P_{1max}$** ☐ bar(g) ■

**MFC/MFM port connection**
☐ without screw-in fitting
☐ 1/4" G-thread (DIN ISO 228/1)
☐ 1/4" NPT-thread (ANSI B1.2)
☐ with screw-in fitting (acc. to specification for pipeline)
☐ mm Pipeline (external Ø)
☐ inch Pipeline (external Ø)
☐ Flange version

**Installation**
☐ horizontal
☐ vertical, flow upwards ☐ vertical, flow downwards

**Ambient temperature** ☐ °C

## Material data

**Body base** ☐ Aluminium ☐ Stainless steel

**Body** ☐ Plastic ☐ Metal (not with type 8712/8702 and not with fieldbus)

**Seal** ☐ FKM ☐ EPDM

## Electrical data

**Signals for set point and actual value**

| with standard signal | | with fieldbus | |
|---|---|---|---|
| Setpoint | actual value | | |
| ☐ 0-5 V | ☐ 0-5 V | ☐ PROFIBUS DP | ☐ M12 |
| ☐ 0-10 V | ☐ 0-10 V | ☐ DeviceNet | ☐ D-Sub (only for type 8712/8702) |
| ☐ 0-20 mA | ☐ 0-20 mA | ☐ CANopen | |
| ☐ 4-20 mA | ☐ 4-20 mA | | |

■ Please quote all pressure values as overpressures with respect to atmospheric pressure bar(ü)

reset form

8) at: 1,013 bar(a) and 0°C 9) at: 1.013 bar (a) and 20°C 10) matches with calibration pressure

**To find your nearest Bürkert facility, click on the orange box →**

In case of special application conditions, please consult for advice.

Subject to alteration.
© Christian Bürkert GmbH & Co. KG

1501/8_EU-en_00891904

bürkert
FLUID CONTROL SYSTEMS

# Mass Flow Controller (MFC) for Gases

- Direct flow measurement for nominal flow rates from 10 $ml_N$/min to 80 $l_N$/min ($N_2$) in MEMS technology
- High accuracy and repeatability
- Protection class IP65
- Optional field bus

Type 8712 can be combined with…

**Type 8619**
Multichannel program controller

**Type 0330**
2/2 or 3/2-way solenoid valve

**Type 6013**
2/2-way solenoid valve

**Type 6606**
2/2 or 3/2-way solenoid valve

Type 8712 controls the mass flow of gases that is relevant for most applications in process technology. The measured value provided by the sensor (see the description on page 2) will be compared in the digital control electronics with the predefined set point according to the signal; if a control difference is present, the control value output to the proportional valve will be modified using a PI-control algorithm.

Due to the fact that the sensor is directly placed in the bypass channel a very short settling time of the MFC is reached. In this way, the mass flow can be maintained at a fixed value or a predefined profile can be followed, regardless of pressure variations or other changes in the system.

Type 8712 can optionally be calibrated for two different gases, the user is able to switch between these two gases. As the control element, a proportional valve working at low friction guarantees a high sensitivity and a good control characteristics of the unit. The MassFlowCommunicator software can be used for parameterisation and diagnosis.

Typical application areas are gas dosing or rather the production of gas mixtures in:

- Pharmaceutical industry
- Food and beverage
- Environmental technology
- Heat treatment

| Technische Daten | |
|---|---|
| **Nominal flow range** [1] **($Q_{nom}$)** | 0.01 $ml_N$/min [2] to 80 $l_N$/min ($N_2$) |
| **Turn-down ratio** | 1:50, wider span on request |
| **Operating gas** | Neutral, non-contaminated gases, others available on request |
| **Calibration gas** | Operating gas or air with correcting function |
| **Max. operating pressure** (inlet pressure) | Up to max. 10 bar (145psi), depending on the orifice of the valve |
| **Gas temperature** | -10 to +70°C (-10 to +60°C with oxygen) |
| **Ambient temperature** | -10 to +50°C |
| **Accuracy** (after 1 min warm up time) | ±0.8% o.R. ±0.3% F.S. (o.R.: of reading; F.S.: of full scale) |
| **Repeatability** | ±0.1% F.S. |
| **Settling time ($t_{95\%}$)** | <300ms |
| **Materials** | |
| Body | Stainless steel |
| Housing | PC (Polycarbonate) |
| Seals | FKM, EPDM (others on request) |
| **Port connection** | G 1/4", NPT 1/4" or compression fitting |
| **Control valve** | Normally closed |
| Valve orifice | 0.05 to 4 mm |
| $k_{Vs}$ value | 0.00006 to 0.32 $m^3$/h |
| **Electr. connection** | Socket M16, round, 8-pin and socket D-Sub HD15, 15-pin |
| Additionally with fieldbus: | With PROFIBUS-DP: Socket M12 5-pin (for IP65) or D-Sub 9-pin With DeviceNet/CANopen: Plug M12 5-pin (for IP65) or D-Sub 9-pin |
| **Operating voltage** | 24V DC |
| **Voltage tolerance** | ±10% |
| **Residual ripple** | <2% |
| **Power consumption** | 3.5–14 W (depending on version) |

[1] The nominal flow value is the max. flow value calibrated which can be controlled. The nominal flow range defines the range of nominal flow rates (full scale values) possible.
[2] Index N: Flow rates referred to 1.013 bar and 0° C.
Alternatively there is an Index S available which refers to 1.013 bar and 20° C.

## Technical data

| **Technical data** (cont.) | |
|---|---|
| **Set point** (signal setting)<br>Feed impedance | 0–5V, 0–10V, 0–20 mA or 4–20 mA<br>>20 k Ω (voltage)<br><300 Ω (current) |
| **Output signal** (signal output)<br>Max. current, volt. output<br>Max. load, current output | 0–5 V, 0–10 V, 0–20 mA or 4–20 mA<br>10 mA<br>600 Ω |
| **Digital communication**<br>via adapter possible: | RS232, Modbus RTU (via RS interface)<br>RS485, RS422 or USB<br>(see accessories table on p. 3) |
| **Fieldbus option** | PROFIBUS-DP, DeviceNet, CANopen<br>(D-Sub HD15 covered with sealed plate with fieldbus MFC) |
| **Type of protection**<br>(with connected cables) | IP65 |
| **Dimensions [mm]** (without fitting) | See drawings on p. 6–8 |
| **Total weight** | 1200 g (Valve internally) |
| **Mounting position** | Horizontal or vertical |
| **Light emitting diodes**<br>(Default, other functions programmable) | Indication for<br>1. Power, 3. Limit<br>2. Communication 4. Error |
| **Binary inputs**<br>(Default, other functions programmable) | Three<br>1. Start Autotune<br>2. Not assigned,<br>Switch between gases when cal. for two gases<br>3. Not assigned |
| **Binary outputs**<br>(Default, other functions programmable) | Two relay outputs<br>1. Limit (desired value can not be achieved)<br>2. Error (e.g. sensor fault)<br>Load capacity: max. 60 V, 1 A, 60 VA |

## Nominal Flow Range of Typical Gases

(other gases on request)

| Gas | Min. $Q_{nom}$ [$l_N$/min] | Max. $Q_{nom}$ [$l_N$/min] |
|---|---|---|
| **Argon** | 0.01 | 80 |
| **Helium** | 0.01 | 500 |
| **Carbon dioxide** | 0.02 | 40 |
| **Air** | 0.01 | 80 |
| **Methane** | 0.01 | 80 |
| **Oxygen** | 0.01 | 80 |
| **Nitrogen** | 0.01 | 80 |
| **Hydrogen** | 0.01 | 500 |

## Measuring Principle

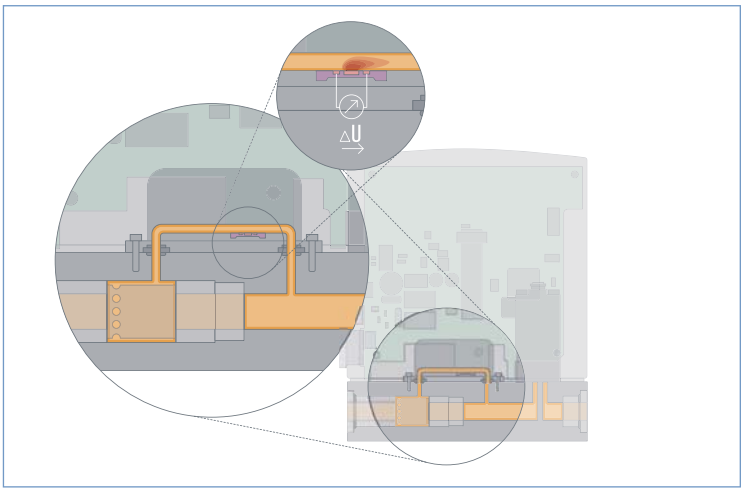


The actual flow rate is detected by a sensor. This operates according to a thermal principle which has the advantage of providing the mass flow which is independent on pressure and temperature.

A small part of the total gas stream is diverted into a small, specifically designed bypassing channel whitch ensures laminar flow conditions.
The sensor element is a chip immersed into the wall of this flow channel. The chip, produced in MEMS technology, contains a heating resistor and two temperature sensors (thermopiles) which are arranged symmetrically upstream and downstream of the heater. The differential voltage of the thermopiles is a measure of the mass flow rate passing the flow sensor. The calibration procedure effectuates a unique assignment of the sensor signal to the total flow rate through the device.

### Notes Regarding the Configuration

For the proper choice of the actuator orifice within the MFC, not only the required maximum flow rate $Q_{nom}$, but also the pressure values *directly* before and after the MFC ($p_1$, $p_2$) at this flow rate $Q_{nom}$ should be known. In general, these pressures are not the same as the overall inlet and outlet pressures of the whole plant, because usually there are additional flow resistors (tubing, additional shut-off valves, nozzles etc.) present both before and after the controller.

Please use the request for quotation form on p. 9 to indicate the pressures *directly* before and after the MFC. If these should be unknown or not accessible to a measurement, estimates are to be made by taking into account the approximate pressure drops over the flow resistors before and after the MFC, respectively, at a flow rate of $Q_{nom}$.
In addition, please quote the maximum inlet pressure $p_{1max}$ to be encountered. This data is needed to make sure the actuator is able to provide a close-tight function within all the specified modes of operation.

**Please use the form on page 8 for the information about your specific requirements..**

## Ordering Chart for Accessories

| Article | Item No. | |
|---|---|---|
| **Connectors/Cables** | | |
| Round plug M16 8-pin (solder connection) | 918 299 | |
| Round plug M16 8-pin with 5 m cable | 787 733 | |
| Round plug M16 8-pin with 10 m cable | 787 734 | |
| Plug D-Sub HD15 15-pin with 5m cable | 787 735 | |
| Plug D-Sub HD15 15-pin with 10m cable | 787 736 | |
| **Adapters** [3] | | |
| RS232 adapter for connection to a computer, connection with an extension cable (item no. 917 039) | 654 757 | |
| Extension cable for RS232 9-pin socket/plug 2 m | 917 039 | |
| RS422-Adapter (RS485 compatible) | 666 370 | |
| USB-Adapter (Version 1.1, USB socket type B) | 670 696 | |
| USB connection cable 2 m | 772 299 | |
| Adapter for manual setting of bus address | 667 525 | |
| Software MassFlowCommunicator | Download unter | |
| **Accessories for Fieldbus** | **PROFIBUS DP (B-codiert)** | **DeviceNet/ CAN-open (A-codiert)** |
| M12-Plug [4] | 918 198 | 917 115 |
| M12-socket (coupling) [4] | 918 447 | 917 116 |
| Y-junction [4] | 902 098 | 788 643 |
| T-junction | 918 531 | (auf Anfrage) |
| Shut-off resistor | 902 553 | (auf Anfrage) |
| GSD-Datei (PROFIBUS), EDS-Datei (DeviceNet, CANopen) | Download unter | |

[3] The adapters serve mainly for initial operation or diagnosis. Those are not obligatory for continuous operation.

[4] The two M12 connectors as listed above cannot be used together on the same side of the Y-junction. At least one of the two M12 connection needs to be a prefabricated cable which uses typiclly a thinner connector.

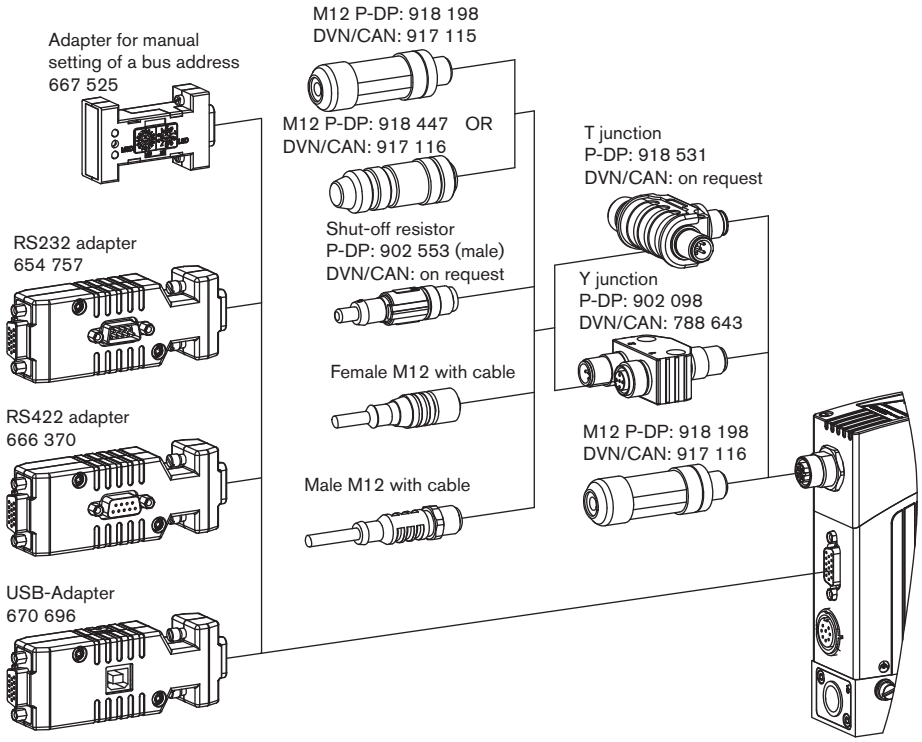

## Pin Assignment

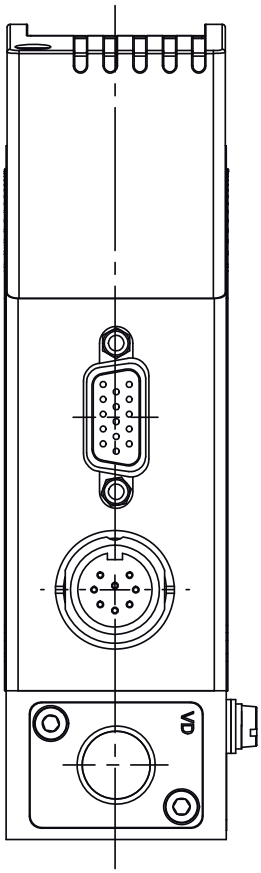

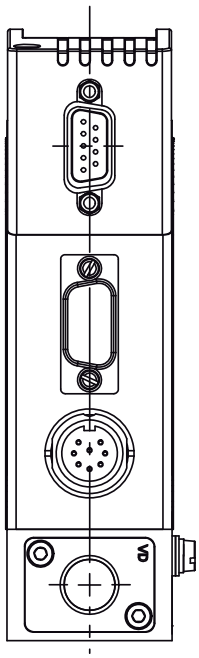

**Socket D-Sub HD15**

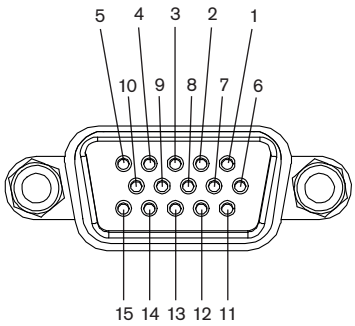


| Pin | Assignment | |
|---|---|---|
| | **Analogue Control** | **Bus control** |
| 1 | Set value input + | N.C. [5] |
| 2 | Set value input GND | N.C. |
| 3 | Actual value output + | N.C. |
| 4 | Binary input 2 | |
| 5 | 12V-Output (only for internal company use) | |
| 6 | RS232 TxD (direct connection to computer) | |
| 7 | Binary input 1 | |
| 8 | GND (for binary inputs) | |
| 9 | only company internal use (do not connect!) | |
| 10 | 12V-Output (only for internal company use) | |
| 11 | 12V-Output (only for internal company use) | |
| 12 | Binary input 3 | |
| 13 | Actual value output GND | N.C. |
| 14 | RS232 RxD direct connection to computer) | |
| 15 | DGND (for RS232-interface) | |

[5] N.C.: not connected (not used)

Note:
- Optional Pin 1 and 2 with bus version as transmitter input possible
- The cable length for RS232/ Setpoint and flow value signal is limited to 30 meters.

**Socket M16, round, 8-pin**

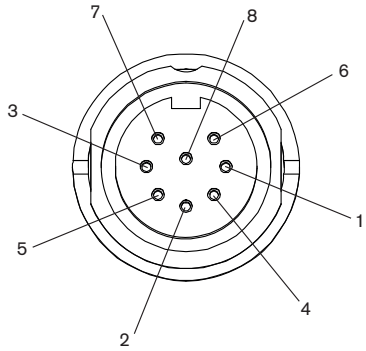


| Pin | Assignment |
|---|---|
| 1 | 24V-Supply + |
| 2 | Relay 1 – reference contact |
| 3 | Relay 2 – reference contact |
| 4 | Relay 1 – normally closed contact |
| 5 | Relay 1 – normally open contact |
| 6 | 24V-Supply GND |
| 7 | Relay 2 – normally open contact |
| 8 | Relay 2 – normally closed contact |

**Socket D-Sub 9-pin**
(only with fieldbus version)

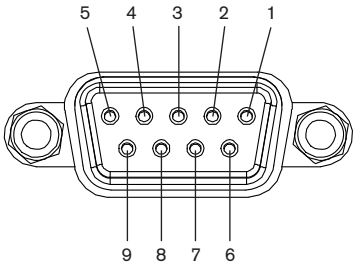


| Pin | Assignment | |
|---|---|---|
| | **PROFIBUS DP** | **DeviceNet/ CANopen** |
| 1 | Shield | Shield |
| 2 | N.C. | CAN-L data line |
| 3 | RxD/TxD - P (B-line) | GND |
| 4 | RTS (control signal for repeater) | N.C. |
| 5 | GND | N.C. |
| 6 | VDD (only for termination resistor) | N.C. |
| 7 | N.C. | CAN-H data line |
| 8 | RxD/TxD - N (A-line) | N.C. |
| 9 | N.C. | N.C. |

## Pin Assignment *(continued)*

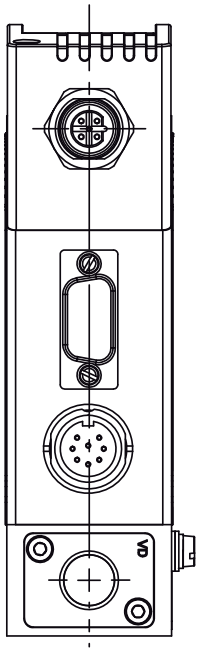

| PROFIBUS DP – socket B-coded M12 (DPV1 max. 12 Mbaud) | Pin | Assignment |
|---|---|---|
| | 1 | VDD (only for termination resistor) |
| | 2 | RxD/TxD – N (A-line) |
| | 3 | DGND |
| | 4 | RxD/TxD – P (B-line) |
| | 5 | N.C. |

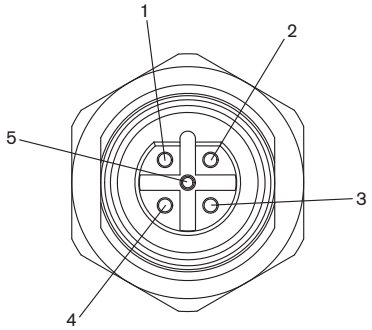


| DeviceNet/ CANopen – Plug A-coded M12 | Pin | Assignment |
|---|---|---|
| | 1 | Shield |
| | 2 | N.C. [6] |
| | 3 | DGND |
| | 4 | CAN_H |
| | 5 | CAN_L |

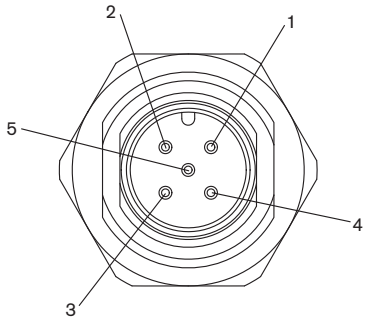


[6] Optional configuration with 24V DC possible for power supply via fieldbus connector. With this no power supply connection on round M16 plug needed.

## Dimensions [mm]

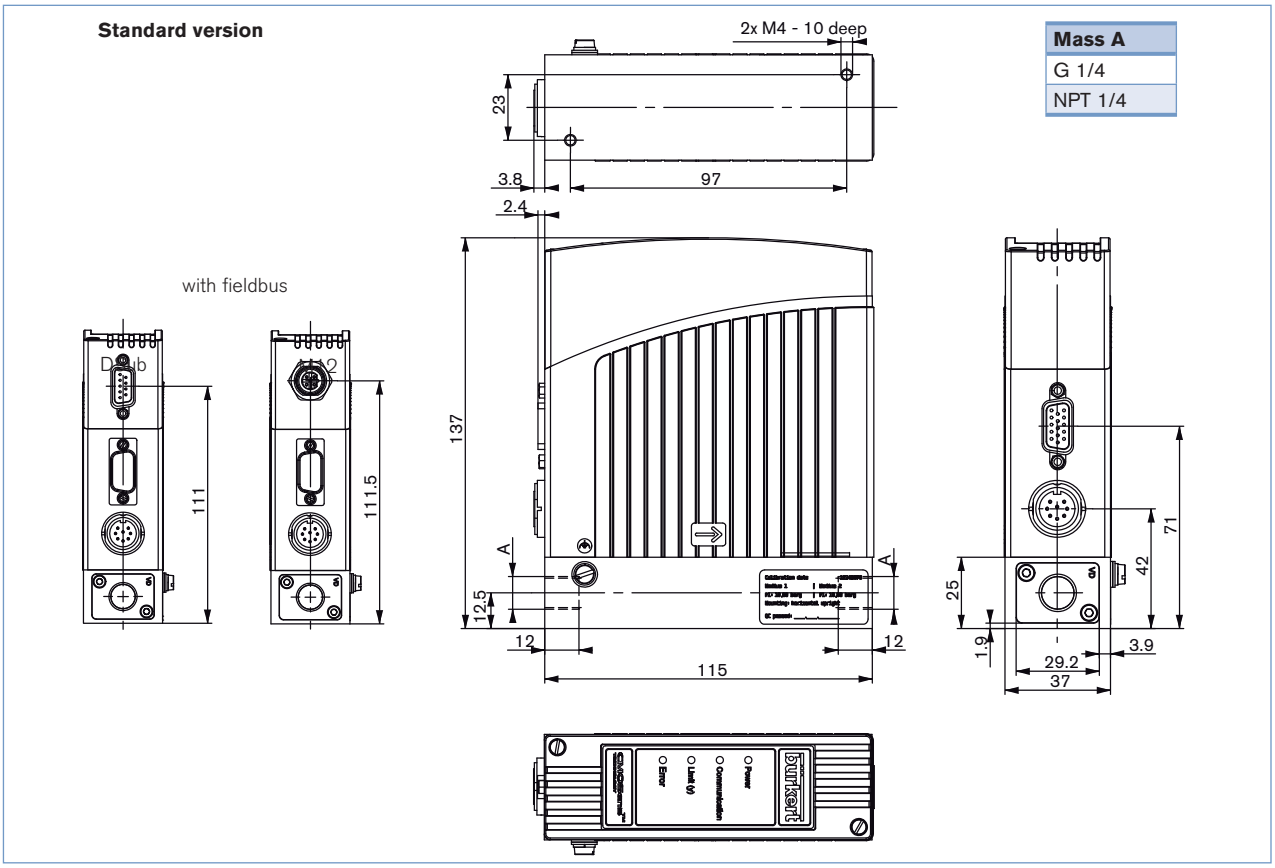


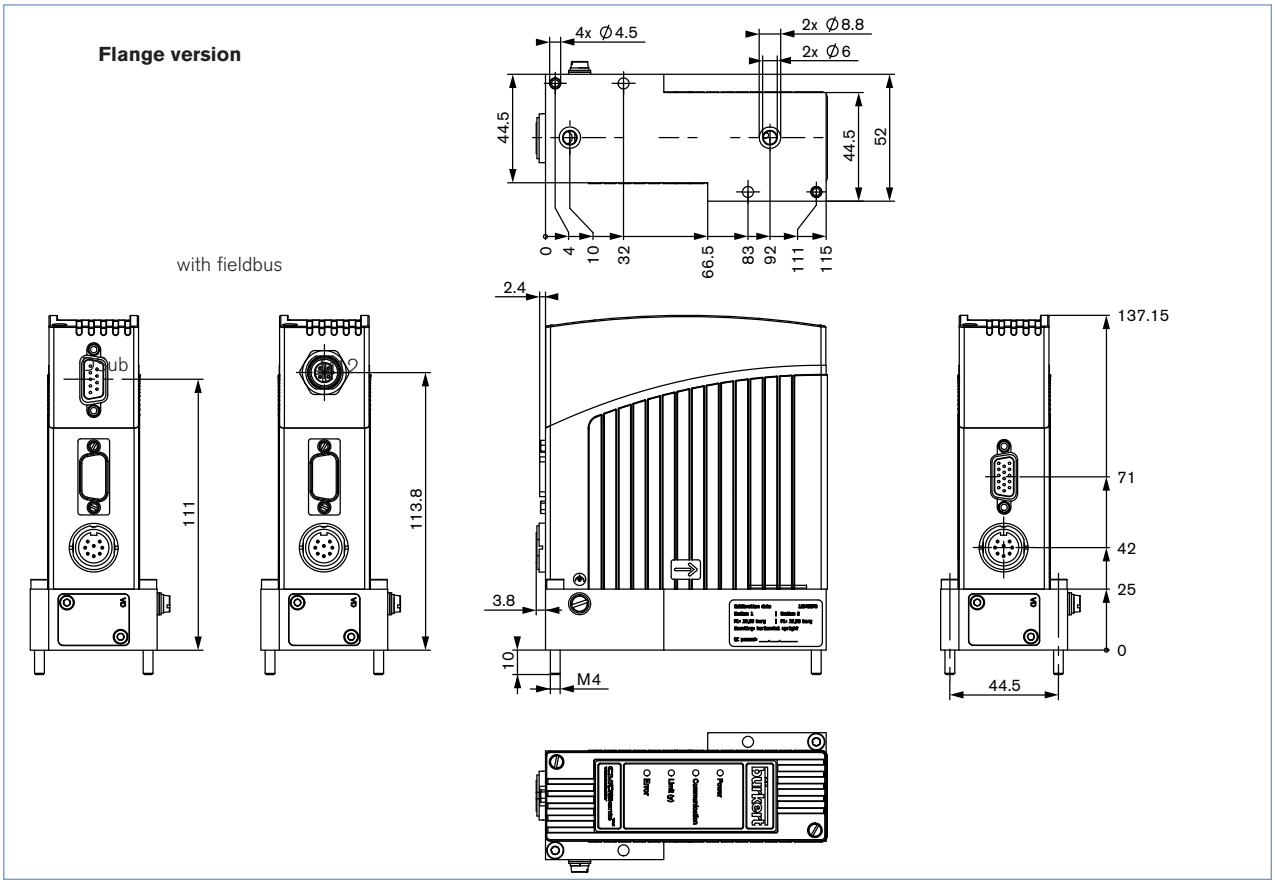

## Dimensions [mm] *(continued)*

**Version with external valve**

| Mass A |
|---|
| G 1/4 |
| NPT 1/4 |

Variants of fieldbus connectors please see on previous pages.

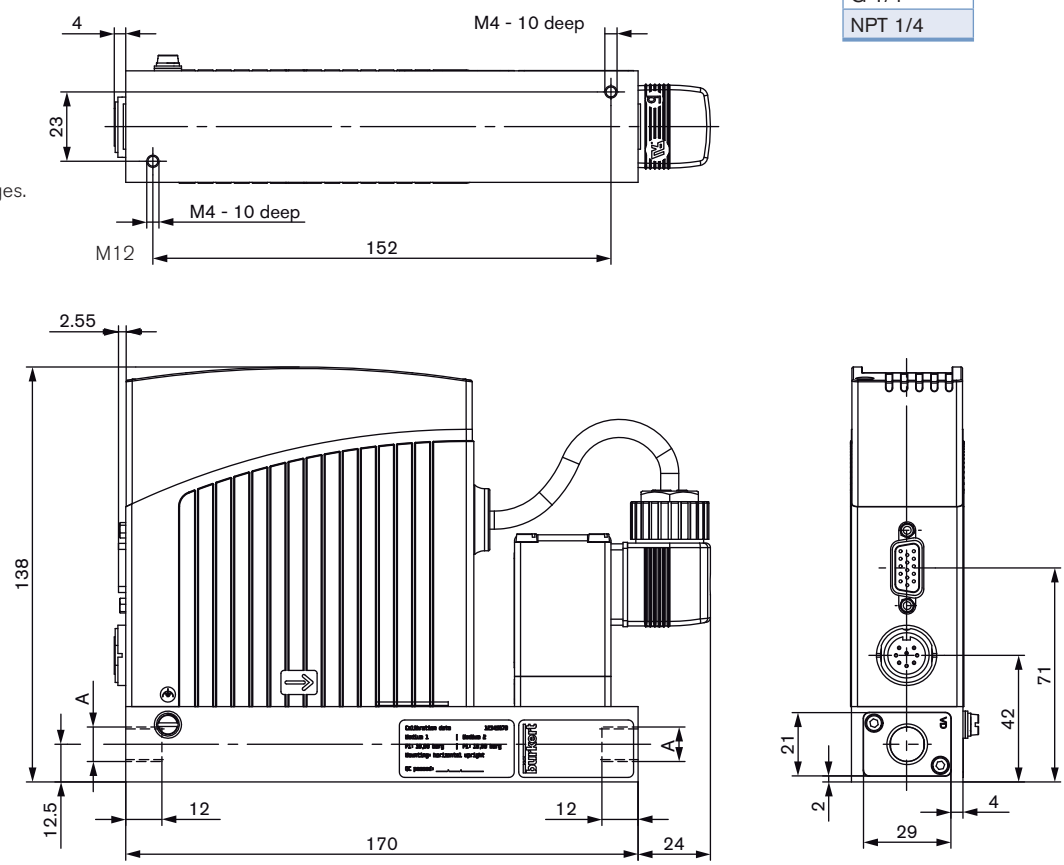

bürkert

**Note**
You can fill out the fields directly in the PDF file before printing out the form.

# MFC/MFM-applications - Request for quotation

## Please complete and send to your nearest Bürkert sales centre

| | |
|---|---|
| Company | Contact person |
| Customer No | Department |
| Address | Tel./Fax |
| Postcode/Town | E-mail |

☐ **MFC-Application** ☐ **MFM-Application** ☐ **Quantity** ☐ **Required delivery date**

## Medium data

**Type of gas (or gas proportion in mixtures)** ☐

**Density** ☐ kg/m³ 7)

**Gas temperature [°C or °F]** ☐ °C ☐ °F

**Moisture content** ☐ g/m³

**Abrasive components/solid particles** ☐ no ☐ yes, as follows: ☐

## Fluidic data

**Flow range $Q_{nom}$** ☐ Min. ☐ $l_N$/min 7) ☐ $l_S$/min (slpm) 8)
☐ Max. ☐ $m_N^3$/h 7) ☐ kg/h
☐ $cm_N^3$/min 7) ☐ $cm_S^3$/min (sccm) 8)
☐ $l_N$/h 7) ☐ $l_S$/h 8)

**Inlet pressure at $Q_{nom}$** 9) $p_1$= ☐ bar(g) ■

**Outlet pressure at $Q_{nom}$** $p_2$= ☐ bar(g) ■

**Max. inlet pressure $P_{1max}$** ☐ bar(g) ■

**MFC/MFM port connection**
☐ without screw-in fitting
☐ 1/4" G-thread (DIN ISO 228/1)
☐ 1/4" NPT-thread (ANSI B1.2)
☐ with screw-in fitting (acc. to specification for pipeline)
☐ mm Pipeline (external Ø)
☐ inch Pipeline (external Ø)
☐ Flange version

**Installation**
☐ horizontal
☐ vertical, flow upwards ☐ vertical, flow downwards

**Ambient temperature** ☐ °C

## Material data

**Body** ☐ Aluminium ☐ Stainless steel

**Housing** ☐ Plastic ☐ Metal (not with type 8712/8702 and not with fieldbus)

**Seal** ☐ FKM ☐ EPDM

## Electrical data

**Signals for set point and actual value**

| **with standard signal** | | **with fieldbus** | |
|---|---|---|---|
| Setpoint | actual value | | |
| ☐ 0-5 V | ☐ 0-5 V | ☐ PROFIBUS DP | ☐ M12 |
| ☐ 0-10 V | ☐ 0-10 V | ☐ DeviceNet | ☐ D-Sub |
| ☐ 0-20 mA | ☐ 0-20 mA | ☐ CANopen | (only for type 8712/8702) |
| ☐ 4-20 mA | ☐ 4-20 mA | | |

■ Please quote all pressure values as overpressures with respect to atmospheric pressure bar(ü)

reset form

7) at: 1,013 bar(a) and 0°C 8) at: 1.013 bar (a) and 20°C 9) matches with calibration pressure

**To find your nearest Bürkert facility, click on the orange box** →

In case of special application conditions, please consult for advice.

Subject to alteration.
© Christian Bürkert GmbH & Co. KG

1501/8_EU-en_00891857

## По вопросам продаж и поддержки обращайтесь:

Архангельск +7 (8182) 45-71-35
Астана +7 (7172) 69-68-15
Астрахань +7 (8512) 99-46-80
Барнаул +7 (3852) 37-96-76
Белгород +7 (4722) 20-58-80
Брянск +7 (4832) 32-17-25
Владивосток +7 (4232) 49-26-85
Владимир +7 (4922) 49-51-33
Волгоград +7 (8442) 45-94-42
Воронеж +7 (4732) 12-26-70
Екатеринбург +7 (343) 302-14-75
Иваново +7 (4932) 70-02-95
Ижевск +7 (3412) 20-90-75
Иркутск +7 (3952) 56-24-09
Йошкар-Ола +7 (8362) 38-66-61
Казань +7 (843) 207-19-05
Калининград +7 (4012) 72-21-36
Калуга +7 (4842) 33-35-03
Кемерово +7 (3842) 21-56-70
Киров +7 (8332) 20-58-70
Краснодар +7 (861) 238-86-59
Красноярск +7 (391) 989-82-67
Курск +7 (4712) 23-80-45
Липецк +7 (4742) 20-01-75
Магнитогорск +7 (3519) 51-02-81
Москва +7 (499) 404-24-72
Мурманск +7 (8152) 65-52-70
Наб.Челны +7 (8552) 91-01-32
Ниж.Новгород +7 (831) 200-34-65
Нижневартовск +7 (3466) 48-22-23
Нижнекамск +7 (8555) 24-47-85
Новороссийск +7 (8617) 30-82-64
Новосибирск +7 (383) 235-95-48
Омск +7 (381) 299-16-70
Орел +7 (4862) 22-23-86
Оренбург +7 (3532) 48-64-35
Пенза +7 (8412) 23-52-98
Первоуральск +7 (3439) 26-01-18
Пермь +7 (342) 233-81-65
Ростов-на-Дону +7 (863) 309-14-65
Рязань +7 (4912) 77-61-95
Самара +7 (846) 219-28-25
Санкт-Петербург +7 (812) 660-57-09
Саранск +7 (8342) 22-95-16
Саратов +7 (845) 239-86-35
Смоленск +7 (4812) 51-55-32
Сочи +7 (862) 279-22-65
Ставрополь +7 (8652) 57-76-63
Сургут +7 (3462) 77-96-35
Сызрань +7 (8464) 33-50-64
Сыктывкар +7 (8212) 28-83-02
Тверь +7 (4822) 39-50-56
Томск +7 (3822) 48-95-05
Тула +7 (4872) 44-05-30
Тюмень +7 (3452) 56-94-75
Ульяновск +7 (8422) 42-51-95
Уфа +7 (347) 258-82-65
Хабаровск +7 (421) 292-95-69
Чебоксары +7 (8352) 28-50-89
Челябинск +7 (351) 277-89-65
Череповец +7 (8202) 49-07-18
Ярославль +7 (4852) 67-02-35

**сайт: burkert.pro-solution.ru | эл. почта: btk@pro-solution.ru**
**телефон: 8 800 511 88 70**