bürkert
FLUID CONTROL SYSTEMS

Type 0142
Magnetventil

2/2-Way Solenoid Valve
2/2-Wege-Magnetventil
Électrovanne à 2/2 voies

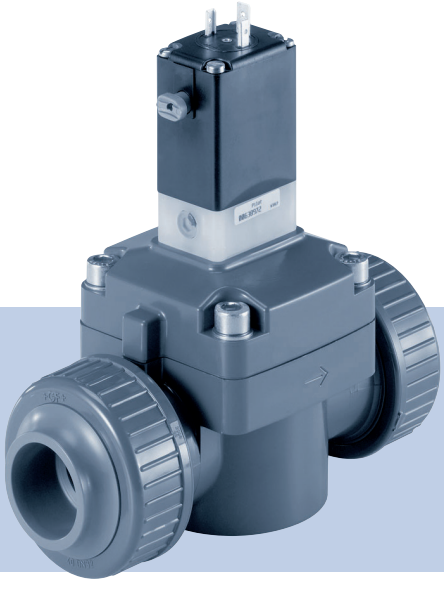

Operating Instructions

Bedienungsanleitung
Manuel d‘utilisation

© Bürkert Werke GmbH & Co. KG, 2013 - 2017
Operating Instructions 1711/05_EU-ML_00893140 / Original
DE

По вопросам продаж и поддержки обращайтесь:

Архангельск +7 (8182) 45-71-35
Астрахань +7 (8512) 99-46-80
Барнаул +7 (3852) 37-96-76
Белгород +7 (4722) 20-58-80
Брянск +7 (4832) 32-17-25
Владивосток +7 (4232) 49-26-85
Волгоград +7 (8442) 45-94-42
Екатеринбург +7 (343) 302-14-75
Ижевск +7 (3412) 20-90-75
Казань +7 (843) 207-19-05
Калуга +7 (4842) 33-35-03
Кемерово +7 (3842) 21-56-70
Киров +7 (8332) 20-58-70
Краснодар +7 (861) 238-86-59
Красноярск +7 (391) 989-82-67
Курск +7 (4712) 23-80-45
Липецк +7 (4742) 20-01-75
Магнитогорск +7 (3519) 51-02-81
Москва +7 (499) 404-24-72
Мурманск +7 (8152) 65-52-70
Наб.Челны +7 (8552) 91-01-32
Ниж.Новгород +7 (831) 200-34-65
Новосибирск +7 (383) 235-95-48
Омск +7 (381) 299-16-70
Орел +7 (4862) 22-23-86
Оренбург +7 (3532) 48-64-35
Пенза +7 (8412) 23-52-98
Пермь +7 (342) 233-81-65
Ростов-на-Дону +7 (863) 309-14-65
Рязань +7 (4912) 77-61-95
Самара +7 (846) 219-28-25
Санкт-Петербург +7 (812) 660-57-09
Саратов +7 (845) 239-86-35
Сочи +7 (862) 279-22-65
Ставрополь +7 (8652) 57-76-63
Сургут +7 (3462) 77-96-35
Тверь +7 (4822) 39-50-56
Томск +7 (3822) 48-95-05
Тула +7 (4872) 44-05-30
Тюмень +7 (3452) 56-94-75
Ульяновск +7 (8422) 42-51-95
Уфа +7 (347) 258-82-65
Хабаровск +7 (421) 292-95-69
Челябинск +7 (351) 277-89-65
Ярославль +7 (4852) 67-02-35

сайт: burkert.pro-solution.ru | эл. почта: btk@pro-solution.ru
телефон: 8 800 511 88 70

1 OPERATING INSTRUCTIONS

The operating instructions contain important information.

- Read the instructions carefully and follow the safety instructions in particular, and also observe the operating conditions.
- Instructions must be available to each user.
- The liability and warranty for Type 0142 are void if the operating instructions are not followed.

2 SYMBOLS

→ designates a procedure which you must carry out.

Warning of serious or fatal injuries:

⚠ **DANGER!**
In case of imminent danger.

⚠ **WARNING!**
In case of potential danger.

Warning of minor or moderately severe injuries:

⚠ **CAUTION!**

Warns of damage to property:

NOTE!

3 INTENDED USE

Non-authorized use of the solenoid valve type 0142 may be a hazard to people, nearby equipment and the environment.

- The device is designed to control, shut off and meter neutral and aggressive media up to a viscosity of 21 mm^2/s.
- Provided the cable plug is connected and installed correctly, e.g. Bürkert type 2508, the device satisfies protection class IP65 in accordance with DIN EN 60528 / IEC 60529.
- Use according to the permitted data, operating conditions and conditions of use specified in the contract documents and operating instructions. These are described in the chapter entitled “Technical data”.
- Correct transportation, correct storage and installation and careful use and maintenance are essential for reliable and problem-free operation.
- Use the device only as intended.

4 BASIC SAFETY INSTRUCTIONS

These safety instructions do not make allowance for any contingencies and events which may arise during installation, operation and maintenance.

Danger – high pressure!

- Before loosening the lines and valves, turn off the pressure and vent the lines.

Risk of electric shock!

- Before reaching into the system, switch off the power supply and secure to prevent reactivation!
- Observe applicable accident prevention and safety regulations for electrical equipment.

Risk of burns/Risk of fire if used continuously through hot device surface!

- Keep the device away from highly flammable substances and media and do not touch with bare hands.

Risk of injury due to malfunction of valves with alternating current (AC).

Sticking core causes coil to overheat, resulting in a malfunction.

- Monitor process to ensure function is in perfect working order.

Risk of short-circuit/escape of media through leaking screw joints.

- Ensure seals are seated correctly.
- Carefully screw valve and connection lines together.

To prevent injury, ensure that:

- Do not make any external modifications to the device bodies. The system cannot be activated unintentionally.
- Installation and repair work may be carried out by authorized technicians only and with the appropriate tools.
- After an interruption in the power supply or pneumatic supply, ensure that the process is restarted in a defined or controlled manner.
- Do not put any loads on the body.
- The device may be operated only when in perfect condition and in consideration of the operating instructions.

5 TECHNICAL DATA

5.1 Operating conditions

The following values are indicated on the type label:

- Voltage (Tolerance ± 10 %) / Current type
- Coil power consumption (active power in W - at operating temp.)
- Pressure range
- Body material: PVC (PV) or PVDF (PD)
- Seal material: FKM, EPDM

Protection class: IP65 with accordance with DIN EN 60529 / IEC 60529 with cable plug, e. g. Bürkert Type 2508

Operating principle:

A (NC)

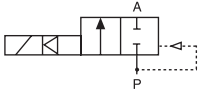

2/2-way valve, normally closed

B (NO)

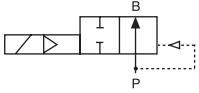

2/2-way valve, normally opened

5.2 Application conditions

Ambient temperature: PVC 0 - +40 °C
PVDF 0 - +55 °C

Permitted medium temperature depending on body material:

Body material	Medium temperature
PVC	0 °C ... +50 °C
PVDF	0 °C ... +70 °C

Pressure - Temperature Diaphragm for PVC and PVDF:

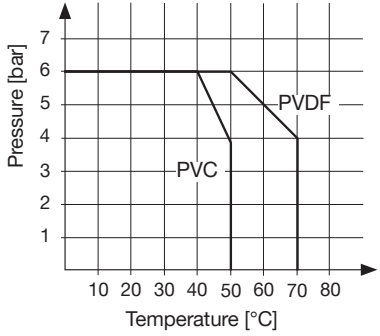

Permitted media depending on seal material:

Seal material	Permitted media
FKM	Oxidizing acids and substances, water
EPDM	Alkalis, alkaline washing and bleaching lyes, water, oil- and grease-free media

Operating duration

Unless otherwise indicated on the type label, the solenoid system is suitable for continuous operation.

Important information for functional reliability during continuous operation!
If standstill for a long period at least 1-2 activations per day are recommended.

Service life

High switching frequency and high pressures reduce the service life.

5.3 Conformity

In accordance with the EU Declaration of conformity, the solenoid valve Type 0142 is compliant with the EU Directives.

5.4 Standards

The applied standards, which verify conformity with the EU Directives, can be found on the EU Type Examination Certificate and / or the EU Declaration of Conformity.

5.5 Type label

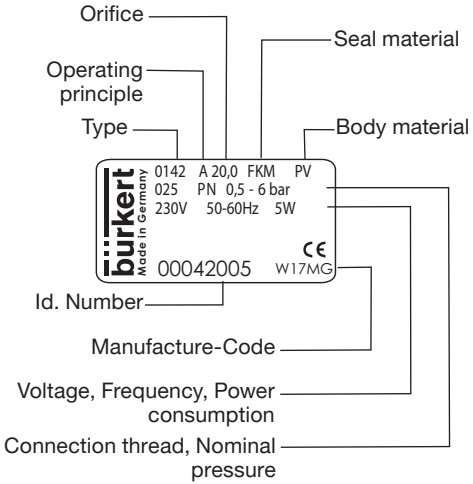

6 INSTALLATION

6.1 Safety instructions

DANGER!

Risk of injury from high pressure in the equipment!

- Before loosening the lines and valves, turn off the pressure and vent the lines.

Risk of injury due to electrical shock!

- Before reaching into the system, switch off the power supply and secure to prevent reactivation!
- Observe applicable accident prevention and safety regulations for electrical equipment!

WARNING!

Risk of injury from improper installation!

- Installation may be carried out by authorized technicians only and with the appropriate tools!

Risk of injury from unintentional activation of the system and an uncontrolled restart!

- Secure system from unintentional activation.
- Following installation, ensure a controlled restart.

6.2 Before installation

Installation position: any, actuator preferably upwards.

Procedure:

→ Check pipelines for dirt and clean.

→ Install a dirt filter before the valve inlet (≤ 500 µm).

6.3 Installation

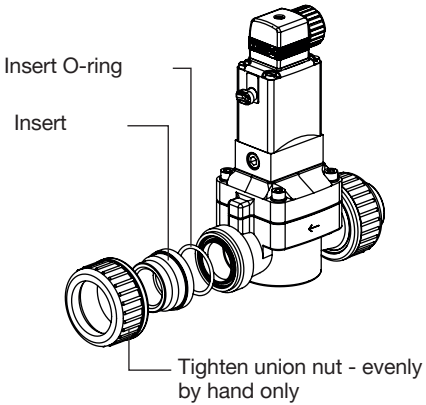

NOTE!

Caution risk of breakage!

• Do not use the coil as a lifting arm.

→ Body with welded sleeve: Use PVDF.

→ Body with bonded sleeves: Use Tangit special adhesive.

Valve body must not be installed under tension.

→ Observe direction of flow:
The arrow on the body indicates the direction of flow (no function in opposite flow direction).

6.4 Manual emergency actuation

CAUTION!

Discharge of medium due to loss of the O-rings!

- If the O-rings are lost, the valve will leak. Medium may be discharged.

NOTE!

Caution!

- When the manual emergency actuation is locked, the valve can no longer be actuated electrically.

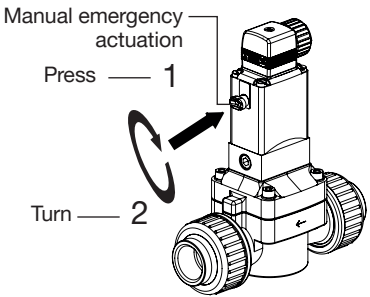

6.5 Electrical connection of the cable plug

WARNING!

Risk of injury due to electrical shock!

- Before reaching into the device / equipment switch off the power supply and secure to prevent reactivation!
- Observe applicable accident prevention and safety regulations for electrical equipment!

If the protective conductor contact between the coil and body is missing, there is danger of electrical shock!

- Always connect protective conductor.
- Check electrical continuity between coil and body.

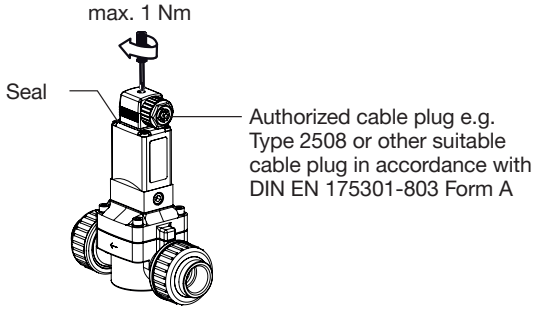

Note the voltage and current type as specified on the type label.

Procedure:

→ Tighten cable plug (for permitted types see data sheet), observing max. torque 1 Nm.

→ Check that seal is fitted correctly.

→ Connect protective conductor and check electrical continuity between coil and body.

6.5.1 Electrical connection - Pulse

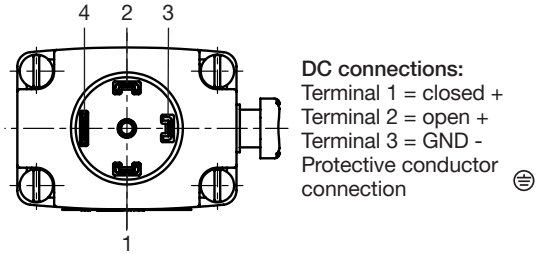

The connection terminals in the cable plug are identified with the numbers 1 to 3 according to the terminals on the valve.

Procedure:

→ Connect the pulse valves (variable code CF 02).

→ For direct current versions connect negative terminal to terminal 3.

NOTE!

Important information:

- Avoid emitting pulses simultaneously to both coil windings.
- Do not switch any other consumers (relays, etc.) at the same time as the terminals.
- The coil connection, to which voltage is not applied, must be galvanically isolated (open).
- If two or more valves are switched in parallel, ensure that this requirement is met by using 2-pole or multi-pole switches.

7 MAINTENANCE, TROUBLESHOOTING

7.1 Safety instructions

WARNING!

Risk of injury from improper maintenance!

- Maintenance may be carried out by authorized technicians only and with the appropriate tools!

Risk of injury from unintentional activation of the system and an uncontrolled restart!

- Secure system from unintentional activation.
- Following maintenance, ensure a controlled restart.

7.2 Malfunctions

If malfunctions occur, check:

→ the device has been installed according to the instructions,

→ the electrical and fluid connections are correct,

→ the device is not damaged,

→ all screws have been tightened,

→ the voltage and pressure have been switched on,

→ the pipelines are clean.

Valve does not switch

Possible cause:

- Short-circuit or coil interrupted.
- Medium pressure outside the permitted pressure range.
- Manual emergency actuation locked.

Valve does not close

Possible cause:

- Internal space of the valve is dirty.
- Manual emergency actuation locked.
- Flow restrictor (valve inlet) or pilot holes (valve inlet / outlet) dirty.

8 SPARE PARTS

CAUTION!

Risk of injury and/or damage by the use of incorrect parts!

Incorrect accessories and unsuitable spare parts may cause injuries and damage the device and the surrounding area.

- Use only original accessories and original spare parts from Bürkert.

8.1 Ordering spare parts

Order the spare-part sets specifying the positions (Pos. 1: Pilot control set, Pos. 2: Wearing part set) and the identification number of the device.

8.2 Overview of spare parts

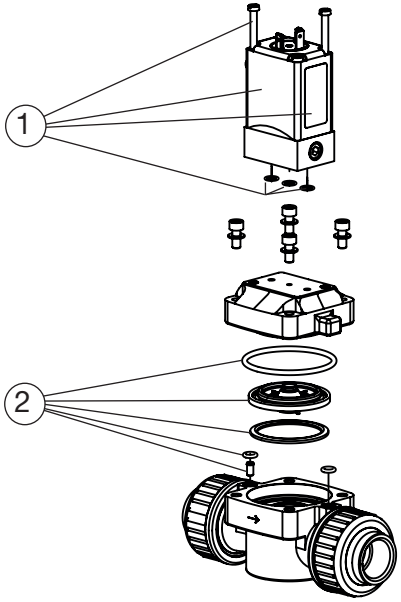

9 TRANSPORT, STORAGE, DISPOSAL

NOTE!

Transport damages!

Inadequately protected equipment may be damaged during transport.

- During transportation protect the device against wet and dirt in shock-resistant packaging.
- Avoid exceeding or dropping below the allowable storage temperature.
- Protect electrical interfaces of the coil and the pneumatic connections from damage with protective caps.

Incorrect storage may damage the device.

- Store the device in a dry and dust-free location!
- Storage temperature: -10 °C ... +50 °C (PVC)
  -10 °C ... +70 °C (PVDF).

Damage to the environment caused by device components contaminated with media.

- Observe applicable regulations on disposal and the environment.

По вопросам продаж и поддержки обращайтесь:

Архангельск +7 (8182) 45-71-35
Астрахань +7 (8512) 99-46-80
Барнаул +7 (3852) 37-96-76
Белгород +7 (4722) 20-58-80
Брянск +7 (4832) 32-17-25
Владивосток +7 (4232) 49-26-85
Волгоград +7 (8442) 45-94-42
Екатеринбург +7 (343) 302-14-75
Ижевск +7 (3412) 20-90-75
Казань +7 (843) 207-19-05
Калуга +7 (4842) 33-35-03
Кемерово +7 (3842) 21-56-70
Киров +7 (8332) 20-58-70
Краснодар +7 (861) 238-86-59
Красноярск +7 (391) 989-82-67
Курск +7 (4712) 23-80-45
Липецк +7 (4742) 20-01-75
Магнитогорск +7 (3519) 51-02-81
Москва +7 (499) 404-24-72
Мурманск +7 (8152) 65-52-70
Наб.Челны +7 (8552) 91-01-32
Ниж.Новгород +7 (831) 200-34-65
Новосибирск +7 (383) 235-95-48
Омск +7 (381) 299-16-70
Орел +7 (4862) 22-23-86
Оренбург +7 (3532) 48-64-35
Пенза +7 (8412) 23-52-98
Пермь +7 (342) 233-81-65
Ростов-на-Дону +7 (863) 309-14-65
Рязань +7 (4912) 77-61-95
Самара +7 (846) 219-28-25
Санкт-Петербург +7 (812) 660-57-09
Саратов +7 (845) 239-86-35
Сочи +7 (862) 279-22-65
Ставрополь +7 (8652) 57-76-63
Сургут +7 (3462) 77-96-35
Тверь +7 (4822) 39-50-56
Томск +7 (3822) 48-95-05
Тула +7 (4872) 44-05-30
Тюмень +7 (3452) 56-94-75
Ульяновск +7 (8422) 42-51-95
Уфа +7 (347) 258-82-65
Хабаровск +7 (421) 292-95-69
Челябинск +7 (351) 277-89-65
Ярославль +7 (4852) 67-02-35

сайт: burkert.pro-solution.ru | эл. почта: btk@pro-solution.ru
телефон: 8 800 511 88 70