bürkert
FLUID CONTROL SYSTEMS

Type 8026 - 8036 - SE36

Flowmeter and Flow transmitter
Durchfluss-Messgerät und Durchfluss-Transmitter
Débitmètre et transmetteur de débit

Operating Instructions

Bedienungsanleitung
Manuel d‘utilisation

MAN 1000182212 EN Version: D Status: RL (released | freigegeben) printed: 08.09.2021

По вопросам продаж и поддержки обращайтесь:

Архангельск +7 (8182) 45-71-35
Астрахань +7 (8512) 99-46-80
Барнаул +7 (3852) 37-96-76
Белгород +7 (4722) 20-58-80
Брянск +7 (4832) 32-17-25
Владивосток +7 (4232) 49-26-85
Владимир +7 (4922) 49-51-33
Волгоград +7 (8442) 45-94-42
Воронеж +7 (4732) 12-26-70
Екатеринбург +7 (343) 302-14-75
Иваново +7 (4932) 70-02-95
Ижевск +7 (3412) 20-90-75
Иркутск +7 (3952) 56-24-09
Йошкар-Ола +7 (8362) 38-66-61
Казань +7 (843) 207-19-05
Калининград +7 (4012) 72-21-36
Калуга +7 (4842) 33-35-03
Кемерово +7 (3842) 21-56-70
Киров +7 (8332) 20-58-70
Краснодар +7 (861) 238-86-59
Красноярск +7 (391) 989-82-67
Курск +7 (4712) 23-80-45
Липецк +7 (4742) 20-01-75
Магнитогорск +7 (3519) 51-02-81
Москва +7 (499) 404-24-72
Мурманск +7 (8152) 65-52-70
Наб.Челны +7 (8552) 91-01-32
Ниж.Новгород +7 (831) 200-34-65
Нижневартовск +7 (3466) 48-22-23
Нижнекамск +7 (8555) 24-47-85
Новороссийск +7 (8617) 30-82-64
Новосибирск +7 (383) 235-95-48
Омск +7 (381) 299-16-70
Орел +7 (4862) 22-23-86
Оренбург +7 (3532) 48-64-35
Пенза +7 (8412) 23-52-98
Первоуральск +7 (3439) 26-01-18
Пермь +7 (342) 233-81-65
Ростов-на-Дону +7 (863) 309-14-65
Рязань +7 (4912) 77-61-95
Самара +7 (846) 219-28-25
Санкт-Петербург +7 (812) 660-57-09
Саранск +7 (8342) 22-95-16
Саратов +7 (845) 239-86-35
Смоленск +7 (4812) 51-55-32
Сочи +7 (862) 279-22-65
Ставрополь +7 (8652) 57-76-63
Сургут +7 (3462) 77-96-35
Сызрань +7 (8464) 33-50-64
Сыктывкар +7 (8212) 28-83-02
Тверь +7 (4822) 39-50-56
Томск +7 (3822) 48-95-05
Тула +7 (4872) 44-05-30
Тюмень +7 (3452) 56-94-75
Ульяновск +7 (8422) 42-51-95
Уфа +7 (347) 258-82-65
Хабаровск +7 (421) 292-95-69
Чебоксары +7 (8352) 28-50-89
Челябинск +7 (351) 277-89-65
Череповец +7 (8202) 49-07-18
Ярославль +7 (4852) 67-02-35

сайт: burkert.pro-solution.ru | эл. почта: btk@pro-solution.ru
телефон: 8 800 511 88 70

MAN 1000182212 EN Version: D Status: RL (released | freigegeben) printed: 08.09.2021

We reserve the right to make technical changes without notice.
Technische Änderungen vorbehalten.
Sous réserve de modification technique.

© Bürkert SAS, 2009 - 2021

Operating Instructions 2109/04_EU-ML 00561367 / Original_FR

1 ABOUT THE OPERATING INSTRUCTIONS 7
1.1 Definition of the word "device" 7
1.2 Validity of the Operating Instructions 7
1.3 Symbols used 7
2 INTENDED USE 8
3 BASIC SAFETY INFORMATION 9
4 GENERAL INFORMATION 10
4.1 Manufacturer's address and international contacts 10
4.2 Warranty conditions 10
4.3 Information on the Internet 10
5 DESCRIPTION 11
5.1 Area of application 11
5.2 Construction of the Type 8026 11
5.3 Construction of the Type SE36 11
5.4 Construction of the Type 8036 12
5.5 Construction of the Type SE36 with a Type S070 or a Type S077 sensor-fitting 12
5.6 Type label 13
6 TECHNICAL DATA 14
6.1 Conditions of use 14
6.2 Conformity to standards and directives 14
6.2.1 Conformity to the pressure equipment directive 14
6.2.2 UL certification 15
6.3 Materials 15
6.4 Dimensions 16
6.5 Mechanical data of fittings 16
6.6 Fluid data 16
6.7 Electrical data 18

MAN 1000182212 EN Version: D Status: RL (released | freigegeben) printed: 08.09.2021

7 ASSEMBLY 20

7.1 Safety instructions 20

7.2 Removing the housing lid 21

7.3 Mounting the housing lid 21

7.4 Mounting the display module 22

7.5 Dismounting the display module 23

8 INSTALLATION AND WIRING 24

8.1 Safety instructions 24

8.2 Installation of a Type 8026 on a pipe 25

8.2.1 Install the Type S020 fitting in the pipe 25

8.2.2 Install the Type 8026 flowmeter into the fitting Type S020 26

8.2.3 Complete the installation of the Type 8026 26

8.3 Installation of a Type 8036 on a pipe 27

8.3.1 Install the Type S030 sensor-fitting in the pipe 27

8.3.2 Assemble the Type SE36 flow transmitter on the Type S030 sensor-fitting 27

8.3.3 Complete the installation of the Type 8036 28

8.4 Installation of a Type SE36 flow transmitter with a Type S070 or a Type S077 sensor-fitting in a pipe 28

8.4.1 Install the Type S070 or the Type S077 sensor-fitting in a pipe 28

8.4.2 Assemble the Type SE36 flow transmitter on the Type S070 or the Type S077 sensor-fitting 29

8.4.3 Complete the installation of the Type SE36 flow transmitter with the Type S070 or the Type S077 sensor-fitting 29

8.5 Wiring 30

8.5.1 Assembling the male or female connector (accessories) 30

8.5.2 Equipotentiality of the installation 31

8.5.3 Wiring a device variant with a single M12 fixed connector, an NPN transistor output and a current output 32

8.5.4 Wiring a device variant with a single M12 fixed connector, two transistor outputs and one current output 33

8.5.5 Wiring a device variant with two M12 fixed connectors, two transistor outputs and two current outputs 35

MAN 1000182212 EN Version: D Status: RL (released | freigegeben) printed: 08.09.2021

9 ADJUSTMENT AND START-UP 39
9.1 Safety instructions 39
9.2 Knowing the operating levels 39
9.3 Using the navigation button 40
9.4 Using the dynamic functions 42
9.5 Entering a numerical value (example) 42
9.6 Browsing in a menu (example) 42
9.7 Knowing the display 43
9.7.1 Knowing the display at the power-up of the device 43
9.7.2 Knowing the icons and LEDs 43
9.8 Knowing the Process level 45
9.9 Accessing the Configuration level 46
9.10 Knowing the structure of the Configuration menus 47
9.11 Knowing the menu Parameter 51
9.11.1 Transferring data from one device to another 51
9.11.2 Modifying the PARAM menu access code 51
9.11.3 Restoring the default parameters of the Process level and the outputs 52
9.11.4 Setting the data displayed in Process level 52
9.11.5 Choosing the units for the totalizers displayed in Process level 53
9.11.6 Displaying the lowest and highest values measured 54
9.11.7 Setting the display contrast and brightness 54
9.11.8 Choosing the output wiring mode 55
9.11.9 Setting the parameters of the current outputs 55
9.11.10 Setting the parameters of the transistor outputs 57
9.12 Knowing the menu Calibration 59
9.12.1 Activating/deactivating the Hold function 59
9.12.2 Modifying the Calibration menu access code 59
9.12.3 Resetting totalizer 1 or totalizer 2 respectively 60
9.12.4 Adjusting the current outputs 60
9.12.5 Entering the K-factor or determining it with Teach-In 61
9.13 Knowing the menu Diagnostic 64
9.13.1 Modifying the Diagnostic menu access code 64
9.13.2 Monitoring the sensor input frequency 64

MAN 1000182212 EN Version: D Status: RL (released | freigegeben) printed: 08.09.2021

9.14 Knowing the menu Test **65**
9.14.1 Modifying the Test menu access code 65
9.14.2 Checking the output functions 65
9.14.3 Checking the outputs behaviour 66
9.15 Knowing the menu Information **67**

10 MAINTENANCE AND TROUBLESHOOTING **68**
10.1 Safety instructions **68**
10.2 Cleaning the device **68**
10.3 Solving problems **69**

11 SPARE PARTS AND ACCESSORIES **71**

12 PACKAGING, TRANSPORT **71**

13 STORAGE **72**

14 DISPOSAL OF THE PRODUCT **72**

MAN 1000182212 EN Version: D Status: RL (released | freigegeben) printed: 08.09.2021

1 ABOUT THE OPERATING INSTRUCTIONS

The Operating Instructions describe the entire lifecycle of the device. Please keep the Operating Instructions in a safe place, accessible to all users and any new owners.

The Operating Instructions contains important safety information.

Failure to comply with these instructions can lead to hazardous situations. Pay attention in particular to the chapters "Basic safety information" and "Intended use".

- Irrespective of the device variant, read the Operating Instructions. If you do not understand the content of the quickstart, then contact Bürkert.
- When the symbol ⚠ is marked inside or outside the device, carefully read the Operating Instructions.

1.1 Definition of the word "device"

The word "device" used in these Operating Instructions refers to the following products:

- Type 8026 flowmeter,
- Type 8036 flowmeter
- Type SE36 flow transmitter.

1.2 Validity of the Operating Instructions

The Operating Instructions are valid for the following devices:

- Type 8026 flowmeter, from the version V2,
- Type 8036 flowmeter, from the version V2,
- Type SE36 flow transmitter, from the version V2.

Mention V2 is given on the device Type-label. Refer to chpt. 5.6.

1.3 Symbols used

⚠ **DANGER**

Warns against an imminent danger.

- Failure to observe this warning can result in death or in serious injury.

⚠ **WARNING**

Warns against a potentially dangerous situation.

- Failure to observe this warning can result in serious injury or even death.

⚠ **CAUTION**

Warns against a possible risk.

- Failure to observe this warning can result in substantial or minor injuries.

MAN 1000182212 EN Version: D Status: RL (released | freigegeben) printed: 08.09.2021

NOTICE

Warns against material damage.

Advice or important recommendations.

Refers to information contained in this quickstart or in other documents.

▸ Indicates an instruction for risk prevention.

→ Indicates a work step that you must carry out.

✔ Indicates a result.

2 INTENDED USE

Use of the device that does not comply with the instructions could present risks to people, nearby installations and the environment.

Type 8026 flowmeter and Type 8036 flowmeter are intended for the measurement of the flow rate of liquids.

Type SE36 flow transmitter associated with a sensor-fitting is intended for the measurement of the flow rate of liquids.

- Use the device in compliance with the characteristics and start-up and use conditions specified in the contractual documents and in the Operating Instructions.
- Do not use the device for security applications.
- Only operate a device in perfect working order.
- Store, transport, install and operate the device properly.
- Only use the device as intended.

MAN 1000182212 EN Version: D Status: RL (released | freigegeben) printed: 08.09.2021

3 BASIC SAFETY INFORMATION

This safety information does not take into account any contingencies or occurrences that may arise during installation, use and maintenance of the device.

The operating company is responsible for the respect of the local safety regulations including staff safety.

Risk of injury due to electrical voltage.

- Before carrying out work on the system or the device, disconnect the electrical power for all the conductors and isolate it.
- If the device is installed either in a wet environment or outdoors, all the electrical voltages must be of max. 35 V DC.
- All equipment connected to the device must be double insulated with respect to the mains according to the standard UL/EN 61010-1.
- Observe all applicable accident protection and safety regulations for electrical equipment.

Risk of injury due to pressure in the installation.

- Before any intervention in the installation, stop the circulation of fluid, cut off the pressure and drain the pipe.
- Before any intervention in the installation, make sure that there is no pressure in the pipe.
- Observe the dependency between the fluid temperature and the fluid pressure.

Risk of burns due to high fluid temperatures.

- Use safety gloves to handle the device.
- Before opening the pipe, stop the circulation of fluid and drain the pipe.
- Before opening the pipe, make sure that the pipe is completely empty.

Risk of injury due to the nature of the fluid.

- Respect the prevailing regulations on accident prevention and safety relating to the use of dangerous fluids.

Various dangerous situations

To avoid injury, observe the following instructions:

- Do not use the device in explosive atmospheres.
- Do not use the device in an environment incompatible with the device materials.
- Do not use fluid that is incompatible with the device materials. Find the compatibility chart on our homepage:
- Do not subject the device to mechanical stress.
- Do not make any modifications to the device.
- Prevent any unintentional power supply switch-on.
- Only qualified and skilled staff may carry out the installation and maintenance work.
- Ensure a defined or controlled restart of the process after a power supply interruption.
- Observe the general technical rules.

MAN 1000182212 EN Version: D Status: RL (released | freigegeben) printed: 08.09.2021

NOTICE

Elements and components that are both sensitive to electrostatic discharges

The device contains electronic components that are sensitive to electrostatic discharges. The components may be damaged if they are touched by an electrostatically charged person or object. In the worst case scenario, the components are instantly destroyed or disabled as soon as they are activated.

- To minimise or even avoid any damage caused by an electrostatic discharge, take all the precautions that are described in the EN 61340-5-1 norm.
- Do not touch any of the live electrical components.

4 GENERAL INFORMATION

4.1 Manufacturer's address and international contacts

To contact the manufacturer of the device, use following address:

Bürkert SAS

Rue du Giessen

BP 21

F-67220 TRIEMBACH-AU-VAL

The addresses of our international sales offices are available on the internet at: _____

4.2 Warranty conditions

The condition governing the legal warranty is the conforming use of the device in observance of the operating conditions specified in the Operating Instructions.

4.3 Information on the Internet

You can find the Operating Instructions and technical data sheets for Type 8026, Type 8036 and Type SE36 at:

_____

MAN 1000182212 EN Version: D Status: RL (released | freigegeben) printed: 08.09.2021

5 DESCRIPTION

5.1 Area of application

The device is intended to measure the flow rate of liquids:

- Type 8026 and Type 8036 flowmeters are used to measure the flow of neutral or slightly aggressive liquids,
- Type SE36 flow transmitter with a Type S070 or a Type S077 sensor-fitting is used to measure the flow rate of viscous liquids such as honey or oil and which are free of solid particles.

Thanks to one or two fully adjustable transistor outputs, the device can be used to switch a solenoid valve, activate an alarm and, thanks to one or two 4...20 mA current outputs, establish one or two control loops.

5.2 Construction of the Type 8026

The Type 8026 flowmeter comprises:

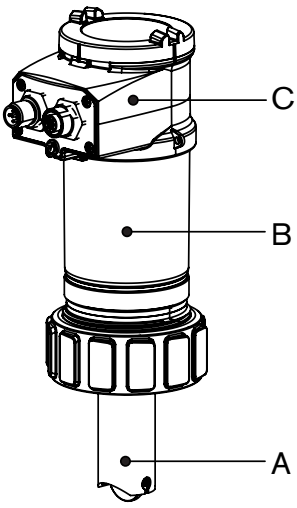	A: a paddle-wheel flow sensor, the rotation of which generates pulses. Set in rotation by the flow, the 4 permanent magnets integrated in the vanes of the paddle generate pulses, the frequency of which is proportional to the flow velocity of the fluid. A conversion coefficient specific to each pipe (material and diameter) is necessary to establish the flow rate value associated with the measurement. The conversion coefficient (K-factor) expressed in pulses per litre is given in the Operating Instructions of the fitting used.
	B: an acquisition / conversion module for the process values measured: ▪ acquisition of the pulse frequency ▪ conversion of the frequency measured into flow rate units
	C: an electrical housing which can include a display module. The display module has a navigation button to read and/or configure the parameters of the device. The display module is not delivered with all the device variants of the flowmeter but is available as accessory. Refer to chpt. 11.

5.3 Construction of the Type SE36

The Type SE36 flow transmitter comprises:

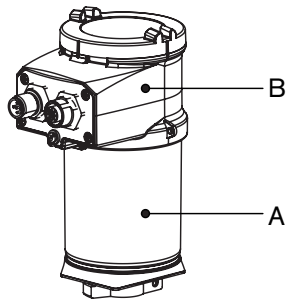	A: an acquisition / conversion module for the process values measured: ▪ acquisition of the pulse frequency ▪ conversion of the frequency measured into flow rate units
	B: an electrical housing which can include a display module. The display module has a navigation button to read and/or configure the parameters of the device. The display module is not delivered with all the device variants of the flowmeter but is available as accessory. Refer to chpt. 11.

MAN 1000182212 EN Version: D Status: RL (released | freigegeben) printed: 08.09.2021

5.4 Construction of the Type 8036

The Type 8036 flowmeter comprises:

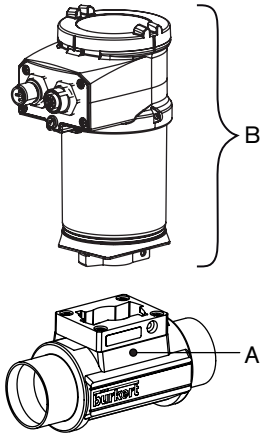	A: a Type S030 sensor-fitting including the paddle-wheel flow sensor. Set in rotation by the flow, the 4 permanent magnets integrated in the vanes of the paddle generate pulses, the frequency of which is proportional to the flow velocity of the fluid. A conversion coefficient specific to each pipe (material and diameter) is necessary to establish the flow rate value associated with the measurement. The conversion coefficient (K-factor) expressed in pulses per litre is given in the Operating Instructions of the sensor-fitting used.
	B: a Type SE36 flow transmitter. Refer to chpt. 5.3.

5.5 Construction of the Type SE36 with a Type S070 or a Type S077 sensor-fitting

The Type SE36 flow transmitter with a Type S070 or a Type S077 sensor-fitting comprises:

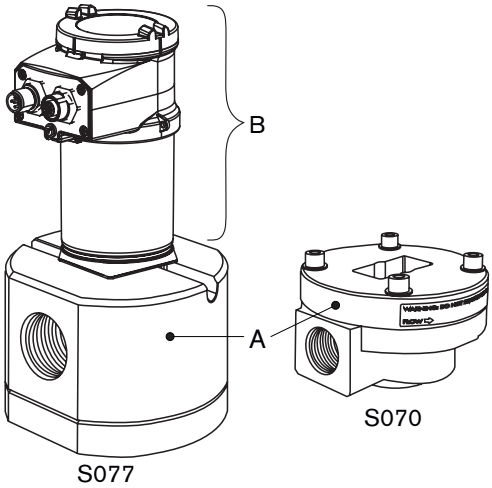	A: a Type S070 or a Type S077 sensor-fitting including the flow sensor with oval gears. Set in rotation by the flow, the magnets integrated in the oval gears generate pulses, the frequency of which is proportional to the volume of fluid. A conversion coefficient specific to each pipe (material and diameter) is necessary to establish the flow rate value associated with the measurement. 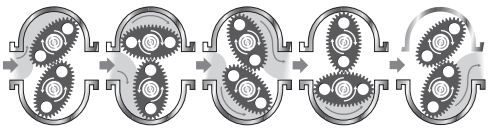 The conversion coefficient (K-factor) expressed in pulses per litre is given in the Operating Instructions of the sensor-fitting used.
	B: a Type SE36 flow transmitter. Refer to chpt. 5.3.

MAN 1000182212 EN Version: D Status: RL (released | freigegeben) printed: 08.09.2021

5.6 Type label

Type 8026 flowmeter	Type 8036 flowmeter or Type SE36 flow transmitter
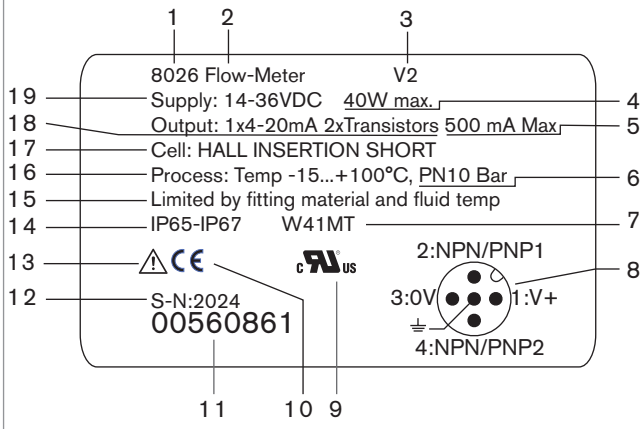	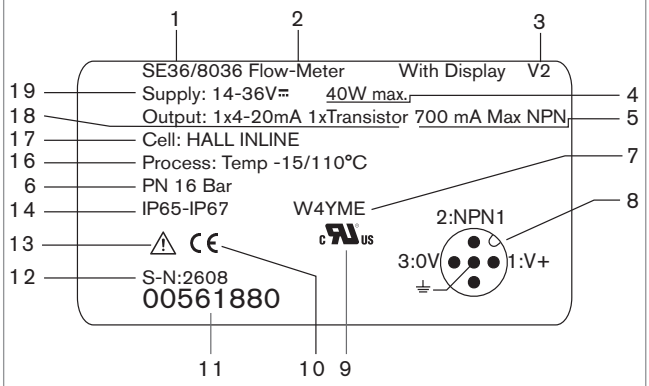

1. Type of the device
2. Measured quantity
3. Device version
4. Maximum power consumption
5. Maximum current available at a transistor output
6. Nominal pressure of the fluid
7. Manufacturing code
8. Pin assignment of an electrical connection
9. Certification
10.Conformity marking
11.Article number
12.Serial number
13.Warning: Before using the device, take into account the technical specifications described in the Operating Instructions.
14.IP-Code
15.Restrictions for fluid temperature and fluid nominal pressure
16.Fluid temperature range
17.Sensor specifications
18.Outputs
19.Operating voltage

Fig. 1 : Type-label (example)

MAN 1000182212 EN Version: D Status: RL (released | freigegeben) printed: 08.09.2021

6 TECHNICAL DATA

6.1 Conditions of use

Ambient temperature	–10...+60 °C
Air humidity	< 85%, without condensation
Use	Indoor and outdoor ▸ Protect the device against electromagnetic interference, ultraviolet rays and, when installed outdoors, the effects of the climatic conditions.
IP-Code 1) *not evaluated by UL*	IP67 1) and IP65 1), according to IEC / EN 60529 Mating connectors must be wired, plugged and tightened. Housing lid must be fully tightened and locked
Operating condition	Continuous operation
Mobility of the device	Fixed device
Degree of pollution	Degree 2 according to UL/EN 61010-1
Installation category	Category I according to UL/EN 61010-1
Maximum height above sea level	2000 m

6.2 Conformity to standards and directives

The applied standards, which verify conformity with the EU directives, can be found on the EU-type examination certificate and/or the EU declaration of conformity (if applicable).

6.2.1 Conformity to the pressure equipment directive

- ▸ Make sure that the device materials or the fitting materials are compatible with the fluid.
- ▸ Make sure that the pipe DN is adapted for the device or the fitting used.
- ▸ Observe the fluid nominal pressure (PN) for the device or the fitting used. The nominal pressure (PN) is given by the device manufacturer or the fitting manufacturer.

Type 8026 flowmeter, Type S030, Type S070 and Type S077 fittings conform to Article 4, Paragraph 1 of the Pressure Equipment Directive 2014/68/EU under the following conditions:

- Device used on a piping (PS = maximum admissible pressure; DN = nominal diameter of the pipe)

Type of fluid	Conditions
Fluid group 1, Article 4, Paragraph 1.c.i	DN ≤ 25
Fluid group 2, Article 4, Paragraph 1.c.i	DN ≤ 32 or PSxDN ≤ 1000 bar
Fluid group 1, Article 4, Paragraph 1.c.ii	DN ≤ 25 or PSxDN ≤ 2000 bar
Fluid group 2, Article 4, Paragraph 1.c.ii	DN ≤ 200 or PS ≤ 10 bar or PSxDN ≤ 5000 bar

MAN 1000182212 EN Version: D Status: RL (released | freigegeben) printed: 08.09.2021

6.2.2 UL certification

Devices with variable key PU01 or PU02 are UL-certified devices and comply also with the following standards:

- UL 61010-1
- CAN/CSA-C22.2 n°61010-1

Identification on the device	**Certification**	**Variable key**
c US	UL recognized	PU01
c UL us LISTED Measuring Equipment EXXXXXX	UL listed	PU02

6.3 Materials

Tab. 1 : Materials, all device variants

Part	**Material**
Housing	stainless steel 316L 1.4404, PPS
Housing seals	EPDM
Housing lid	PC
Housing-lid seal	silicone
Display module	PC / PBT
M12 male connector, M12 female connector	▪ nickel-plated brass ▪ stainless steel, on request
Support plate of the M12 male connector or M12 female connector	PPS CF30
Screws	stainless steel
G2" nut	PC

Tab. 2 : Materials specific to the Type 8026 and in contact with the fluid

Part	**Material**
Flow-sensor holder	PVDF
Holder seal	FKM, by default
Paddle-wheel axis, paddle-wheel shaft	Ceramic (Al_2O_3)
Paddle wheel	PVDF

Tab. 3 : Materials specific to the Type SE36

Part	**Material**
Quarter-turn system	PC

MAN 1000182212 EN Version: D Status: RL (released | freigegeben) printed: 08.09.2021

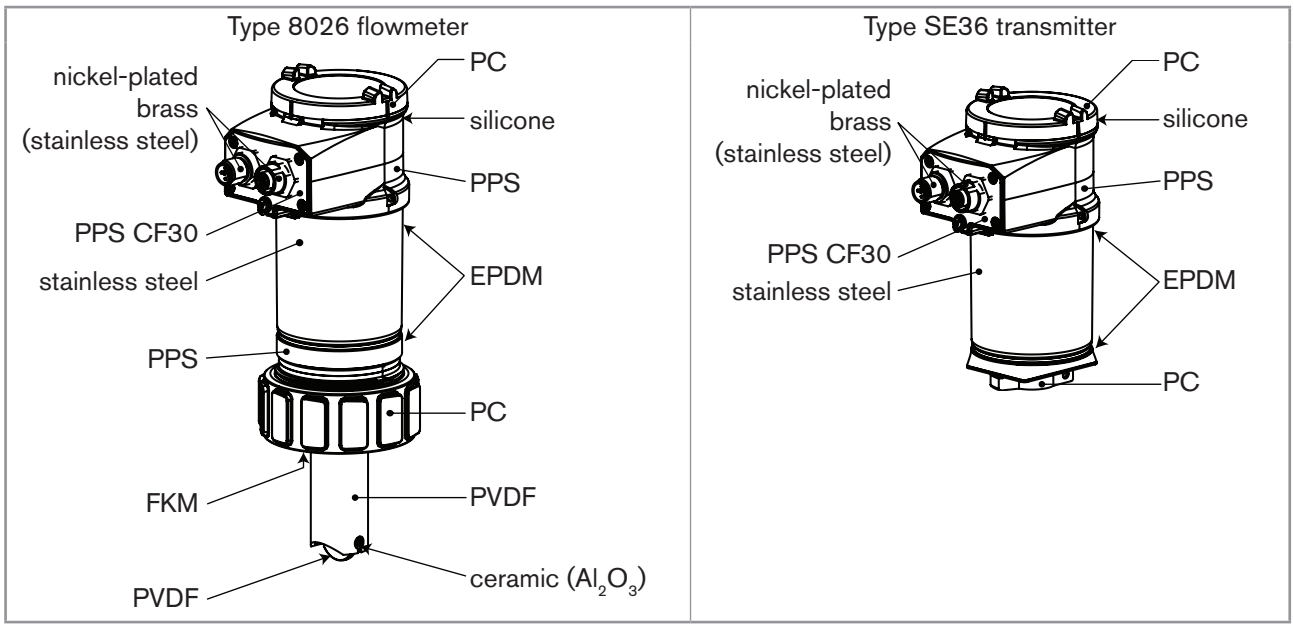

Fig. 2 : Materials of the device

6.4 Dimensions

→ Refer to the technical data sheets related to the device at: _____

6.5 Mechanical data of fittings

→ Refer to the technical data sheets of the related fittings at: _____

6.6 Fluid data

Pipe diameter	DN06 to DN400; For Type S020 or Type S030 fitting, the appropriate diameter is determined using the flow rate / DN / fluid velocity graphs: refer to the Operating Instructions of the related fitting
Type of fitting	
▪ Type 8026	▪ Type S020
▪ Type SE36	▪ Type S030, Type S070 or Type S077
Fluid temperature	
▪ Type 8026	▪ −15...+100 °C; Take into account the dependency between the fluid temperature and the fluid pressure. Refer to Fig. 3.
▪ Type 8036, Type SE36	▪ Refer to the Operating Instructions that are delivered with the fitting used.

MAN 1000182212 EN Version: D Status: RL (released | freigegeben) printed: 08.09.2021

Fluid pressure	Also refer to the requirements of the Pressure Equipment Directive: see chpt. 6.2.1
▪ Type 8026 2) *not evaluated by UL*	▪ PN10 [2] Take into account the dependency between the fluid temperature and the fluid pressure. Refer to Fig. 3.
▪ Type 8036, Type SE36	▪ Refer to the Operating Instructions that are delivered with the fitting used.
Type of fluid	
▪ Type 8026, Type 8036	▪ Neutral or slightly aggressive fluids
▪ Type SE36 with a Type S070 fitting or a Type S077 fitting	▪ Viscous fluids, free of solid particles
Fluid viscosity	
▪ Type 8026, Type 8036	▪ 300 cSt max.
▪ Type SE36 with a Type S070 fitting or a Type S077 fitting	▪ Refer to the Operating Instructions that are delivered with the fitting used.
Solid particle rate in the fluid	
▪ Type 8026, Type 8036	▪ ≤ 1 %
▪ Type SE36 with a Type S070 fitting or a Type S077 fitting	▪ 0 %
Flow rate measurement for Type 8026 and Type 8036	
▪ Measurement range	▪ 0.3...10 m/s
▪ Linearity	▪ ±0.5 % of the full scale (10 m/s) [3]
▪ Repeatability	▪ ±0.4 % of the measured value [3]
▪ Measurement deviation with standard K-factor	▪ ±2.5 % of the measured value [3]
▪ Measurement deviation with a Teach-in procedure	▪ ±1 % of the measured value (at the value of the teach-in flow rate) [3]
Flow rate measurement for Type SE36 with a Type S070 or a Type S077 fitting	
▪ **Measurement range**	
- viscosity > 5 mPa.s	- Type S070: 2...1200 l/min - Type S077: 2...1200 l/min
- viscosity < 5 mPa.s	- Type S070: 3...616 l/min - Type S077: 3...616 l/min
▪ **Measurement deviation**	
- with standard K-factor	- Type S070: ±0.5 % of the measured value [3] - Type S077: ±1 % of the measured value [3]
- with K-factor determined with a teach-in procedure or with the specific K-factor, engraved on the fitting	- Type S070: ±0.5 % of the measured value (at the value of the teach-in flow rate) [3] - Type S077: ±0.5 % of the measured value (at the value of the teach-in flow rate) [3]
▪ **Repeatability**	▪ ±0.03 % of the measured value [3]

3) *Determined in the following reference conditions: fluid = water, water and ambient temperatures = 20 °C, upstream and downstream distances respected, appropriate pipe dimensions.*

MAN 1000182212 EN Version: D Status: RL (released | freigegeben) printed: 08.09.2021

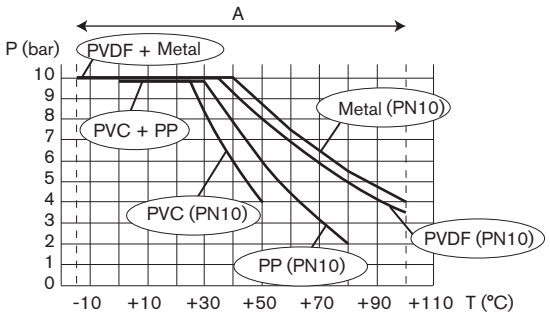

A: Operating range

Fig. 3 : Dependency between the fluid temperature and the fluid pressure, Type 8026 associated to a fitting Type S020

6.7 Electrical data

Operating voltage	
▪ device variant with 2 or 3 outputs (2 wires)	▪ 14...36 V DC ▪ connection to main supply: permanent through external safety extra-low voltage (SELV) and through limited power source (LPS) ▪ filtered and regulated ▪ oscillation rate: ±10 %
▪ device variant with 4 outputs (3 wires)	▪ 12...36 V DC ▪ connection to main supply: permanent through external safety extra-low voltage (SELV) and through limited power source (LPS) ▪ filtered and regulated ▪ oscillation rate: ±10 %
Power source (not supplied)	▪ Limited power source according to UL/EN 60950-1 standards ▪ or limited energy circuit according to UL/EN 61010-1, Paragraph 9.4
Current consumption	
▪ device variant with 2 or 3 outputs (2 wires)	▪ 25 mA max. (at 14 V DC)
▪ device variant with 4 outputs (3 wires)	▪ 5 mA max. (at 12 V DC)
Current consumption, with loads on the transistors	1 A max.
Power consumption	40 W max.
Protection against polarity reversal	yes
Protection against voltage spikes	yes
Protection against short circuits	yes, transistor outputs
Current output	4...20 mA, sink ("NPN sink") or source ("PNP source"), through wiring and through software setting, 22 mA to indicate a fault (software setting)
▪ device variant with only 1 current output (2 wires)	▪ maximum loop impedance: 1100 Ω at 36 V DC, 610 Ω at 24 V DC, 180 Ω at 14 V DC
▪ device variant with 2 current outputs (3 wires)	▪ maximum loop impedance: 1100 Ω at 36 V DC, 610 Ω at 24 V DC, 100 Ω at 12 V DC

MAN 1000182212 EN Version: D Status: RL (released | freigegeben) printed: 08.09.2021

Transistor output	
▪ device variant with only 1 transistor output	▪ NPN, 700 mA max., 1...36 V DC
▪ device variant with 2 transistor outputs	
- type	- NPN (/sink) or PNP (/source). Through wiring and through software setting
- NPN output	- 1...36 V DC, 700 mA max. (or 500 mA max. if 2 transistor outputs are wired)
- PNP output	- supply voltage, 700 mA max. (or 500 mA max. if 2 transistor outputs are wired)
- protection	- galvanically insulated, protected against overvoltages, polarity reversals and short-circuits

MAN 1000182212 EN Version: D Status: RL (released | freigegeben) printed: 08.09.2021

7 ASSEMBLY

7.1 Safety instructions

DANGER

Risk of injury due to electrical voltage.

- Before carrying out work on the system or the device, disconnect the electrical power for all the conductors and isolate it.
- If the device is installed either in a wet environment or outdoors, all the electrical voltages must be of max. 35 V DC.
- All equipment connected to the device shall be double insulated with respect to the mains according to the standard UL/EN 61010-1.
- Observe all applicable accident protection and safety regulations for electrical equipment.

Risk of injury due to pressure in the installation.

- Before any intervention in the installation, stop the circulation of fluid, cut off the pressure and drain the pipe.
- Before any intervention in the installation, make sure that there is no pressure in the pipe.
- Observe the dependency between the fluid temperature and the fluid pressure.

Risk of burns due to high fluid temperatures.

- Use safety gloves to handle the device.
- Before opening the pipe, stop the circulation of fluid and drain the pipe.
- Before opening the pipe, make sure that the pipe is completely empty.

Risk of injury due to the nature of the fluid.

- Respect the prevailing regulations on accident prevention and safety relating to the use of dangerous fluids.

WARNING

Risk of injury due to non-conforming installation.

- The electrical and fluid installation can only be carried out by qualified and skilled staff with the appropriate tools.
- Install appropriate safety devices (correctly rated fuse and/or circuit-breaker).
- Respect the installation instructions for the fitting used.

Risk of injury if the dependency between the fluid pressure and the fluid temperature is not respected.

- Observe the dependency between the fluid temperature and the fluid pressure for the device. Refer to chpt. 6.6.
- Observe the dependency between the fluid temperature and the fluid pressure for the fitting used. Refer to the Operating Instructions of the fitting used.

MAN 1000182212 EN Version: D Status: RL (released | freigegeben) printed: 08.09.2021

WARNING

Risk of injury due to unintentional switch on of power supply or uncontrolled restart of the installation.

- Avoid unintentional activation of the installation.
- Guarantee a defined or controlled restart of the process after any intervention on the device.

7.2 Removing the housing lid

NOTICE

The tightness of the device is not guaranteed when the housing lid is removed.

- Prevent the projection of liquid inside the housing.

The device may be damaged if a metal component comes into contact with the electronics.

- Prevent contact of the electronics with a metallic item.

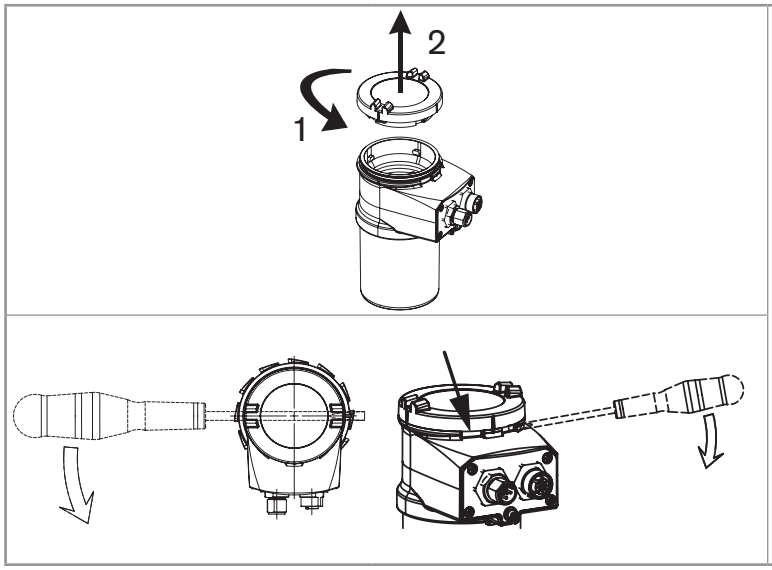

→ [1] Turn the housing lid counterclockwise with an angle of about 15° to unlock it.

→ [2] Remove the housing lid.

If the housing lid grips to the housing:

→ Use an appropriate tool to unlock the housing lid, taking care not to scratch the glass.

→ Insert an apropriate tool into the groove of the housing.

→ Lever the housing lid up.

Fig. 4 : Removing the housing lid

7.3 Mounting the housing lid

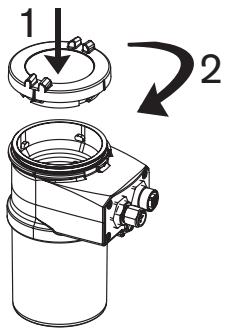

→ Check that there is a seal on the housing and that it is not damaged. Replace the seal if necessary.

→ Grease the seal if necessary, using a component compatible with the seal material.

→ [1] Set the housing lid to ensure that the 4 grooves of the housing lid match with the 4 pins of the housing.

→ [2] Turn the housing lid clockwise with an angle of about 15° to lock it.

Fig. 5 : Closing the housing lid

MAN 1000182212 EN Version: D Status: RL (released | freigegeben) printed: 08.09.2021

7.4 Mounting the display module

NOTICE

The tightness of the device is not guaranteed when the housing lid is removed.

- Prevent the projection of liquid inside the housing.

The device may be damaged if a metal component comes into contact with the electronics.

- Prevent contact of the electronics with a metallic item.

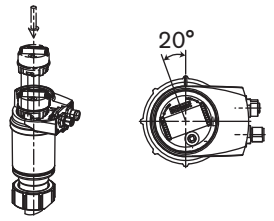	→ Remove the housing lid. Refer to chpt. 7.2. → Set the display module at an angle of ca. 20° in relation to the desired position.
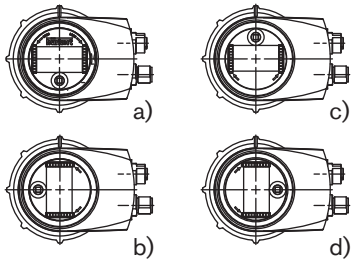	→ The display module can be mounted in 4 different positions, at 90° intervals.
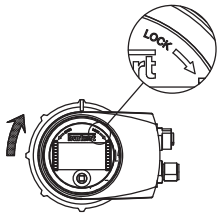	→ Fully push in the display module and turn clockwise to lock it. → Put the housing lid back.

Fig. 6 : Mounting the display module

MAN 1000182212 EN Version: D Status: RL (released | freigegeben) printed: 08.09.2021

7.5 Dismounting the display module

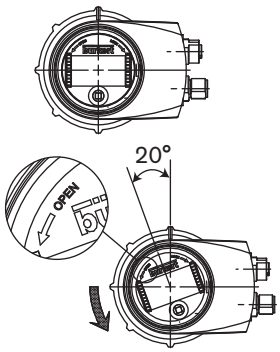	→ Remove the housing lid if necessary. Refer to chpt. 7.2. → Turn the module by ca. 20° counterclockwise. Once unlocked, the display module is raised slightly by the spring action.
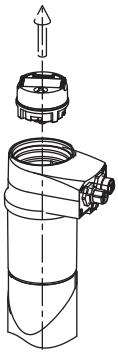	→ Remove the display module from its housing.

Fig. 7 : Dismounting the display module

MAN 1000182212 EN Version: D Status: RL (released | freigegeben) printed: 08.09.2021

8 INSTALLATION AND WIRING

8.1 Safety instructions

Risk of injury due to electrical voltage.

- Before carrying out work on the system or the device, disconnect the electrical power for all the conductors and isolate it.
- If the device is installed either in a wet environment or outdoors, all the electrical voltages must be of max. 35 V DC.
- All equipment connected to the device must be double insulated with respect to the mains according to the standard UL/EN 61010-1.
- Observe all applicable accident protection and safety regulations for electrical equipment.

Risk of injury due to pressure in the installation.

- Before any intervention in the installation, stop the circulation of fluid, cut off the pressure and drain the pipe.
- Before any intervention in the installation, make sure that there is no pressure in the pipe.
- Observe the dependency between the fluid temperature and the fluid pressure.

Risk of burns due to high fluid temperatures.

- Use safety gloves to handle the device.
- Before opening the pipe, stop the circulation of fluid and drain the pipe.
- Before opening the pipe, make sure that the pipe is completely empty.

Risk of injury due to the nature of the fluid.

- Respect the prevailing regulations on accident prevention and safety relating to the use of dangerous fluids.

WARNING

Risk of injury due to non-conforming installation.

- The electrical and fluid installation can only be carried out by qualified and skilled staff with the appropriate tools.
- Install appropriate safety devices (correctly rated fuse and/or circuit-breaker).
- Respect the installation instructions for the fitting used.

Risk of injury due to unintentional switch on of power supply or uncontrolled restart of the installation.

- Avoid unintentional activation of the installation.
- Guarantee a defined or controlled restart of the process after any intervention on the device.

MAN 1000182212 EN Version: D Status: RL (released | freigegeben) printed: 08.09.2021

8.2 Installation of a Type 8026 on a pipe

DANGER

Risk of injury due to pressure in the installation.

- Before any intervention in the installation, stop the circulation of fluid, cut off the pressure and drain the pipe.
- Before any intervention in the installation, make sure that there is no pressure in the pipe.

Risk of injury due to the nature of the fluid.

- Respect the prevailing regulations on accident prevention and safety relating to the use of dangerous fluids.

Follow the next steps to install the Type 8026 flowmeter properly:

1. Install the fitting Type S020 in the pipe,
2. Insert the Type 8026 flowmeter into the fitting Type S020,
3. Complete the installation of the Type 8026.

8.2.1 Install the Type S020 fitting in the pipe

→ Select a Type S020 fitting that is adapted to the fluid velocity. Refer to the chart in the data sheet of the related fitting.

→ Choose a place for the fitting on the pipe so that the following conditions are met:

- air bubbles do not appear in the pipe, in the section around the sensor (Fig. 8).
- the pipe is always filled in the section around the sensor (Fig. 8).

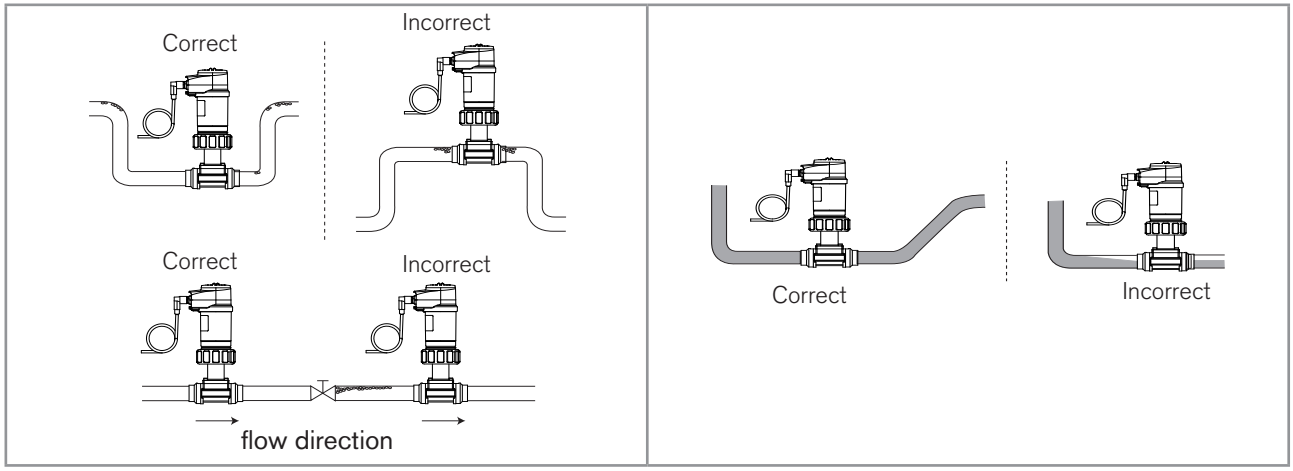

Fig. 8 : Air bubbles within the pipe / Filling of the pipe

MAN 1000182212 EN Version: D Status: RL (released | freigegeben) printed: 08.09.2021

CAUTION

Risk of damage when installing the fitting.

▸ Respect the installation instructions given in the Operating Instructions of the fitting.

→ Install the fitting in the pipe so that the paddle wheel axis of the device is horizontal (Fig. 9).

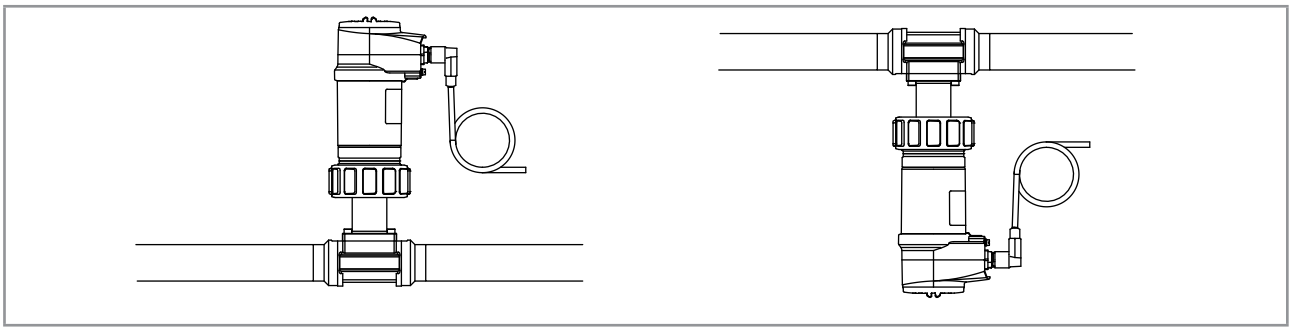

Fig. 9 : Mounting positions for an horizontal paddle-wheel axis

8.2.2 Install the Type 8026 flowmeter into the fitting Type S020

→ Fit the display module to parameter the device. Refer to chpt. 7.4.

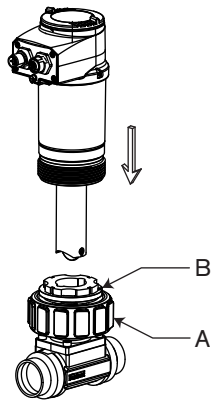

→ Make sure that there is a seal on the device and that it is not damaged. Replace the seal if necessary.

→ Place nut A on the fitting and insert circlip B into the groove.

→ Carefully insert the device into the fitting.

✔ If assembly is correct, the device can no longer rotate on itself.

→ Secure the unit with nut A, tightening only by hand.

Fig. 10 : Installation of a Type 8026 flowmeter into the fitting Type S020

8.2.3 Complete the installation of the Type 8026

→ Wire the device. Refer to chpt. 8.5.

→ Energize the device.

→ With the display module, set the K-factor or determine it through a Teach-In procedure. Refer to chpt. 9.12.5.

MAN 1000182212 EN Version: D Status: RL (released | freigegeben) printed: 08.09.2021

8.3 Installation of a Type 8036 on a pipe

DANGER

Risk of injury due to pressure in the installation.

- Before any intervention in the installation, stop the circulation of fluid, cut off the pressure and drain the pipe.
- Before any intervention in the installation, make sure that there is no pressure in the pipe.

Risk of injury due to the nature of the fluid.

- Respect the prevailing regulations on accident prevention and safety relating to the use of dangerous fluids.

Follow the next steps to install the Type 8036 flowmeter properly:

1. Install the Type S030 sensor-fitting in the pipe,
2. Assemble the Type SE36 flow transmitter on the Type S030 sensor-fitting ,
3. Complete the installation of the Type 8036.

8.3.1 Install the Type S030 sensor-fitting in the pipe

→ Select a Type S030 sensor-fitting that is adapted with the fluid velocity. Refer to the chart in the data sheet of the related fitting.

→ Choose a place for the Type S030 sensor-fitting on the pipe so that the following conditions are met:

- air bubbles do not appear in the pipe, in the section around the sensor. Refer to Fig. 8, chpt. 8.2.1.
- the pipe is always filled in the section around the sensor. Refer to Fig. 8, chpt. 8.2.1.

CAUTION

Risk of damage when installing the fitting.

- Respect the installation instructions given in the Operating Instructions of the fitting.

→ Install the Type S030 sensor-fitting in the pipe so that the paddle wheel axis is horizontal. Refer to Fig. 9, chpt. 8.2.1.

8.3.2 Assemble the Type SE36 flow transmitter on the Type S030 sensor-fitting

→ Fit the display module to parameter the device. Refer to chpt. 7.4.

MAN 1000182212 EN Version: D Status: RL (released | freigegeben) printed: 08.09.2021

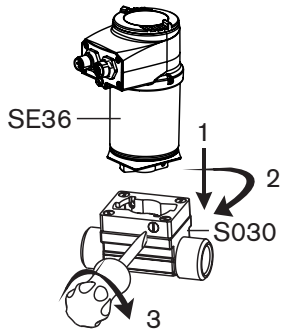	→ 1: Insert the Type SE36 flow transmitter in the sensor holder. → 2: Turn the Type SE36 flow transmitter by a quarter turn. → 3: To fix the Type SE36 flow transmitter to the Type S030 sensor-fitting, tighten the screw to a torque of max. 1 N·m.

Fig. 11 : Assembling the Type 8036 flowmeter

8.3.3 Complete the installation of the Type 8036

→ Wire the device. Refer to chpt. 8.5.

→ Energize the device.

→ With the display module, set the K-factor or determine it through a Teach-In procedure. Refer to chpt. 9.12.5.

8.4 Installation of a Type SE36 flow transmitter with a Type S070 or a Type S077 sensor-fitting in a pipe

DANGER

Risk of injury due to pressure in the installation.

- Before any intervention in the installation, stop the circulation of fluid, cut off the pressure and drain the pipe.
- Before any intervention in the installation, make sure that there is no pressure in the pipe.

Risk of injury due to the nature of the fluid.

- Respect the prevailing regulations on accident prevention and safety relating to the use of dangerous fluids.

Follow the next steps to install the Type SE36 flow transmitter properly on the Type S070 or the Type S077 sensor-fitting, mounted in the pipe:

1. Install the Type S070 or the Type S077 sensor-fitting in the pipe,
2. Assemble the Type SE36 flow transmitter on the Type S070 or the Type S077 sensor-fitting,
3. Complete the installation of the Type SE36 flow transmitter with the Type S070 or the Type S077 sensor-fitting.

8.4.1 Install the Type S070 or the Type S077 sensor-fitting in a pipe

→ Select a Type S070 or a Type S077 sensor-fitting adapted to the fluid viscosity. Refer to the chart in the data sheet of the related fitting.

MAN 1000182212 EN Version: D Status: RL (released | freigegeben) printed: 08.09.2021

CAUTION

Risk of damage when installing the fitting.

▸ Respect the installation instructions given in the Operating Instructions of the fitting.

→ Install the Type S070 or the Type S077 sensor-fitting in the pipe so that the oval gear axes are in the horizontal plane. Refer to Fig. 12.

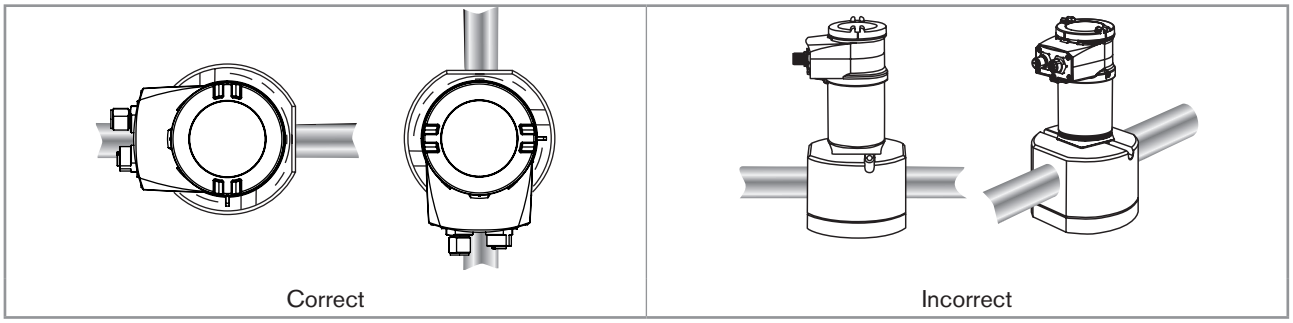

Fig. 12 : The oval gear axes must be horizontal (seen from the front)

8.4.2 Assemble the Type SE36 flow transmitter on the Type S070 or the Type S077 sensor-fitting

→ Fit the display module to parameter the device. Refer to chpt. 7.4.

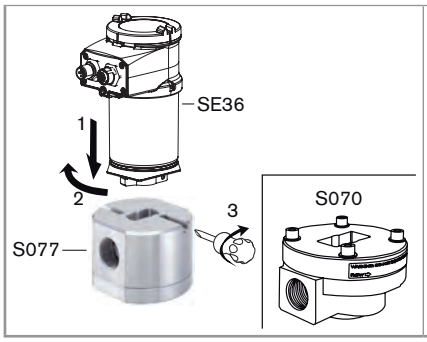

→ 1: Insert the Type SE36 flow transmitter in the sensor holder.

→ 2: Turn the Type SE36 flow transmitter by a quarter turn.

→ 3: To fix the Type SE36 flow transmitter to the Type S070 or the Type S077 sensor-fitting, tighten the screw to a torque of max. 1 N·m.

Fig. 13 : Assembling the Type SE36 flow transmitter with the Type S070 or the Type S077 sensor-fitting

8.4.3 Complete the installation of the Type SE36 flow transmitter with the Type S070 or the Type S077 sensor-fitting

→ Wire the device. Refer to chpt. 8.5.

→ Energize the device.

→ With the display module, set the K-factor or determine it through a Teach-In procedure. Refer to chpt. 9.12.5.

MAN 1000182212 EN Version: D Status: RL (released | freigegeben) printed: 08.09.2021

8.5 Wiring

DANGER

Risk of injury due to electrical voltage.

- Before carrying out work on the system or the device, disconnect the electrical power for all the conductors and isolate it.
- If the device is installed either in a wet environment or outdoors, all the electrical voltages must be of max. 35 V DC.
- All equipment connected to the device must be double insulated with respect to the mains according to the standard UL/EN 61010-1.
- Observe all applicable accident protection and safety regulations for electrical equipment.

- Use a high-quality electrical power supply. The power supply must be filtered and regulated.
- Make sure that the installation is equipotential. Refer to chpt. 8.5.2.
- Protect the power supply of the device with a 100 mA time-delay fuse and a switch.
- Protect the power supply of each transistor output with a 750 mA fuse.
- Once the device is wired, set the "HWMode" parameter depending on the wiring carried out, sink/NPN or source/PNP. Refer to chpt. 9.11.8.

8.5.1 Assembling the male or female connector (accessories)

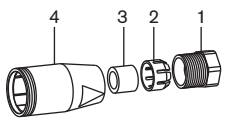	→ Unscrew the nut [1] on the body [4]. → Insert the cable into the nut [1], the cable clamp [2] and the seal [3], and then into the body [4].
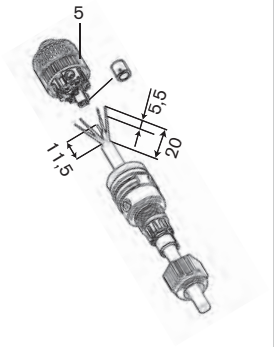	→ Strip 20 mm of the cable. → Cut the central wire (earth) so that its length is equal to 11.5 mm. → Expose 5.5 mm of the wires on the stripped cable. → Insert each wire into the appropriate pin on the terminal block [5]. Refer to chpt. 8.5.3 to 8.5.5. → Tighten the terminal block [5] wired to the body [4]. → Tighten the connector nut [1].

Fig. 14 : M12 multi-pin connector (available as an accessory)

MAN 1000182212 EN Version: D Status: RL (released | freigegeben) printed: 08.09.2021

8.5.2 Equipotentiality of the installation

To ensure the equipotentiality of the installation (power supply - device - fluid):

→ Connect together the various earth spots in the installation to eliminate the potential differences that may occur between different earthes.

→ Observe faultless grounding of the shield of the power supply cable. Refer to Fig. 15 and Fig. 16.

→ If the device is installed on plastic pipes, earth together the metallic equipment such as pumps or valves, that is as close as possible to the device. Refer to Fig. 16.

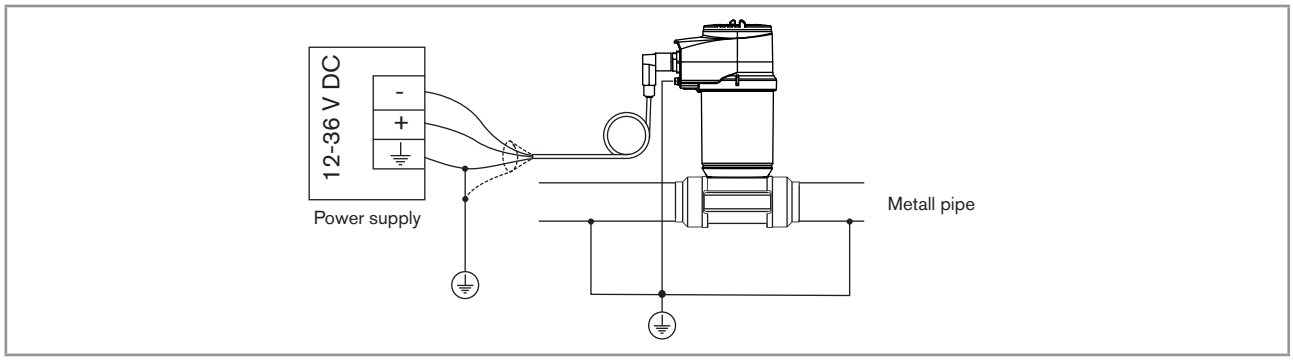

Fig. 15 : Equipotentiality skeleton diagram with pipes in metal

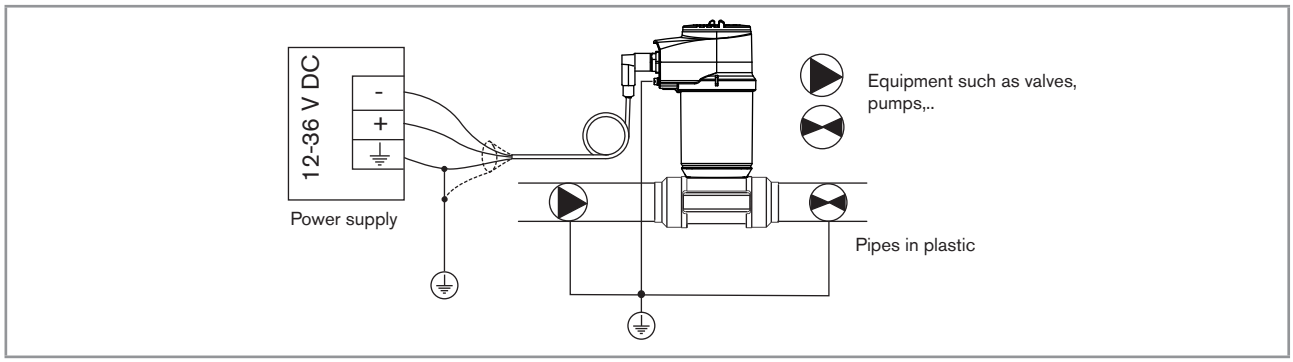

Fig. 16 : Equipotentiality skeleton diagram with pipes in plastic

MAN 1000182212 EN Version: D Status: RL (released | freigegeben) printed: 08.09.2021

8.5.3 Wiring a device variant with a single M12 fixed connector, an NPN transistor output and a current output

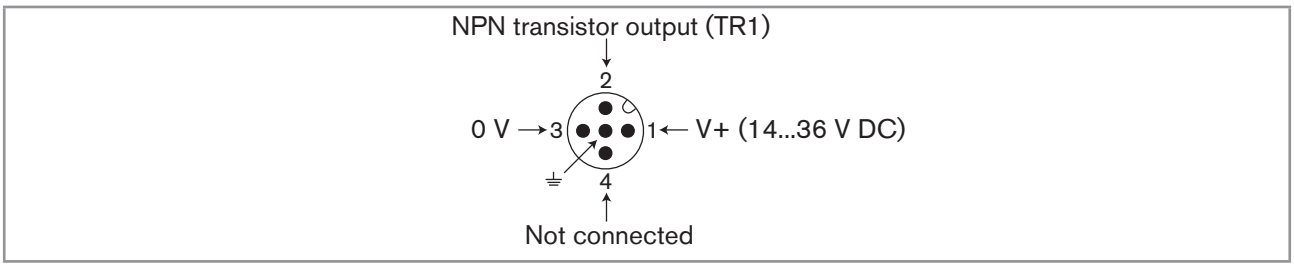

Fig. 17 : Pin assignment of the male fixed connector, device variant with 1 NPN transistor output and 1 current output

Pin of the female M12 connector available as an accessory (article number 438680)	Colour of the wire
1	brown
2	white
3	blue
4	black
5	green/yellow or grey

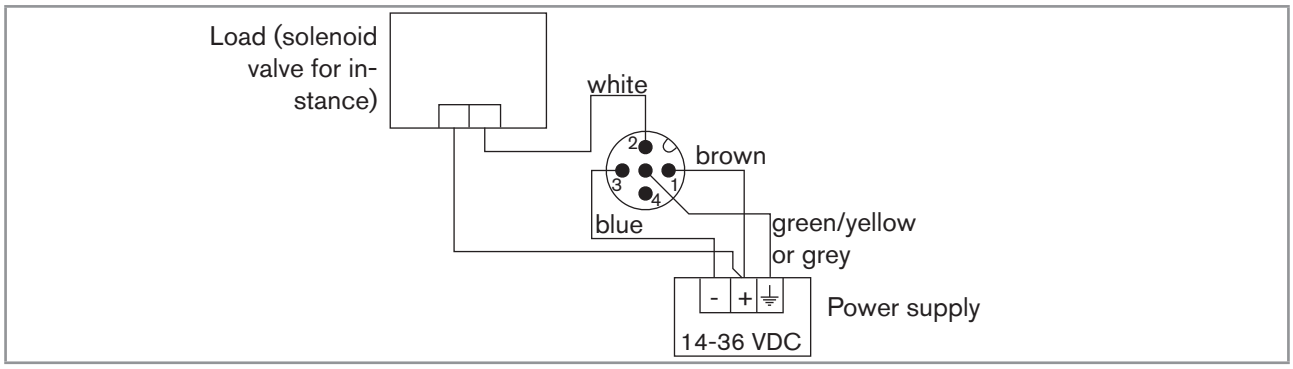

Fig. 18 : Transistor output, NPN wiring (parameter setting "NPN/sink", cannot be changed), device variant with 1 M12 fixed connector, 1 NPN transistor output and 1 current output

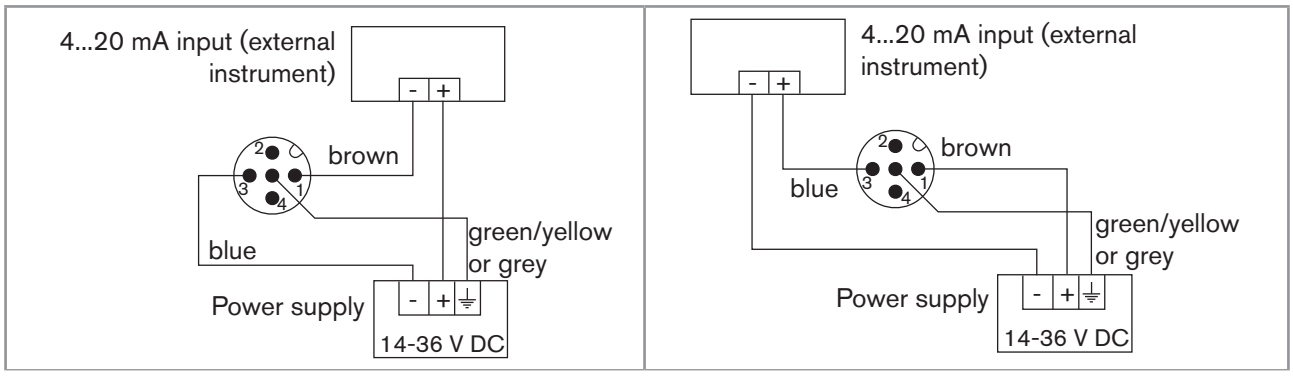

Fig. 19 : Possible electrical connections of the current output only, device variant with 1 M12 fixed connector, 1 NPN transistor output and 1 current output

MAN 1000182212 EN Version: D Status: RL (released | freigegeben) printed: 08.09.2021

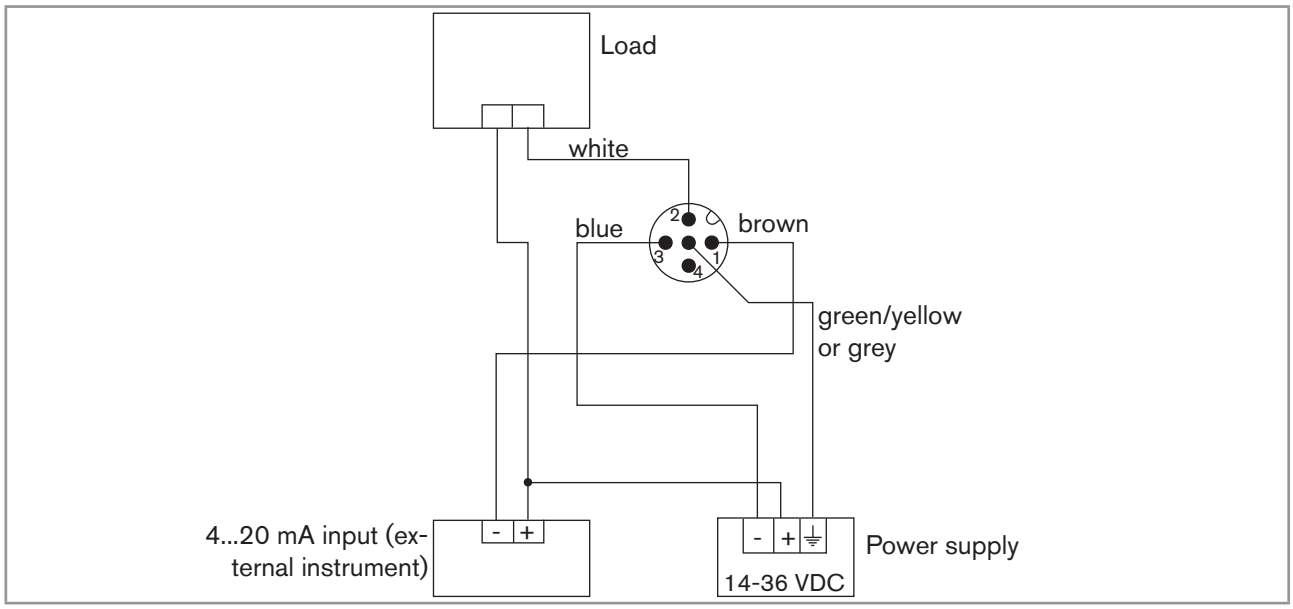

Fig. 20 : *Transistor output, NPN wiring, and current output in sinking mode (parameter setting "NPN/sink", cannot be changed), device variant with 1 M12 fixed connector, 1 NPN transistor output and 1 current output*

8.5.4 Wiring a device variant with a single M12 fixed connector, two transistor outputs and one current output

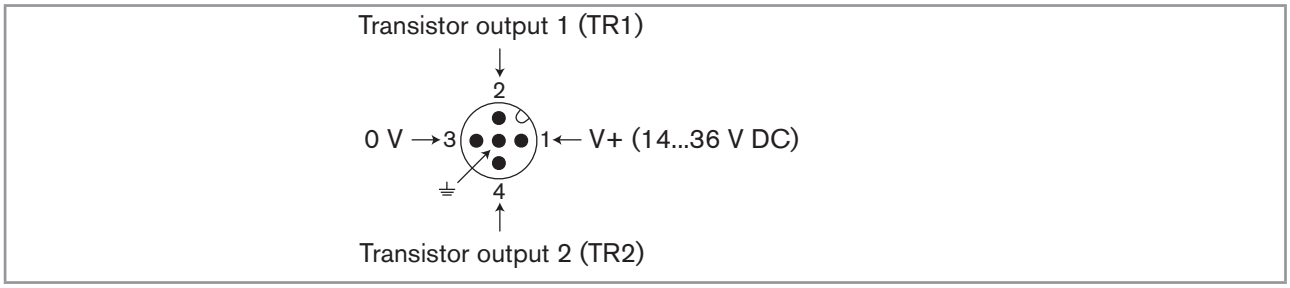

Fig. 21 : *Pin assignment of the male fixed connector, device variant with 2 transistor outputs and 1 current output*

Pin of the female M12 connector available as an accessory (article number 438680)	Colour of the wire
1	brown
2	white
3	blue
4	black
5	green/yellow or grey

MAN 1000182212 EN Version: D Status: RL (released | freigegeben) printed: 08.09.2021

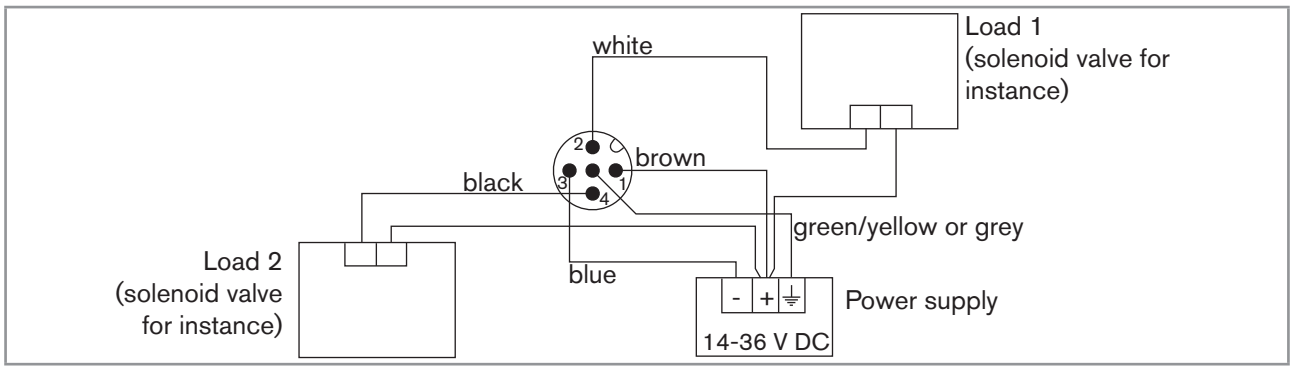

Fig. 22 : *NPN wiring of both transistor outputs (parameter setting "NPN/sink"), device variant with 1 M12 fixed connector*

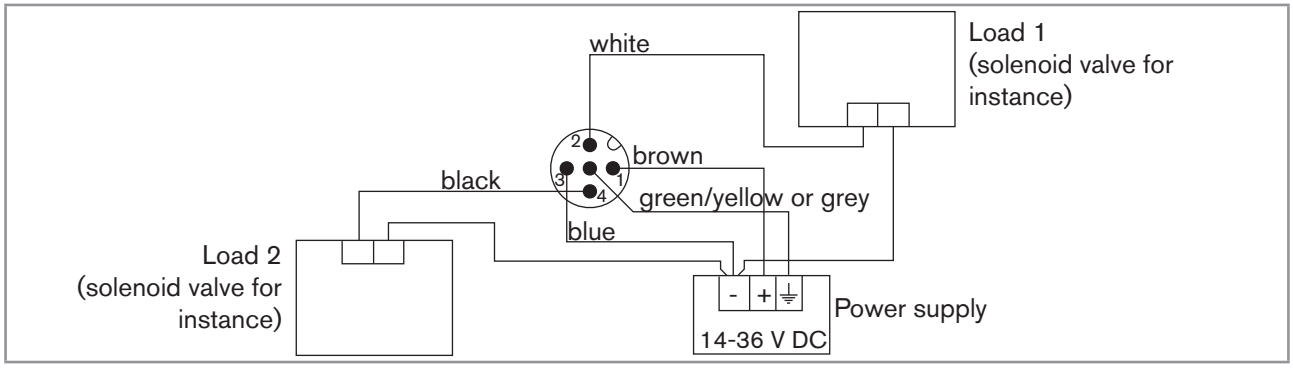

Fig. 23 : *PNP wiring of both transistor outputs (parameter setting "PNP/source"), device variant with 1 M12 fixed connector*

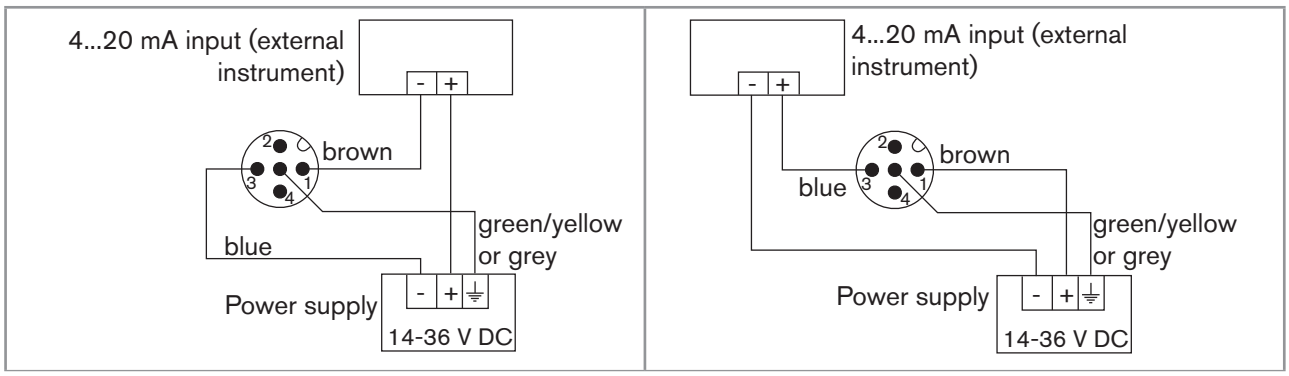

Fig. 24 : *Possible electrical connections of the current output only (whatever the parameter setting, "NPN/sink" or "PNP/source"), device variant with 1 M12 fixed connector*

MAN 1000182212 EN Version: D Status: RL (released | freigegeben) printed: 08.09.2021

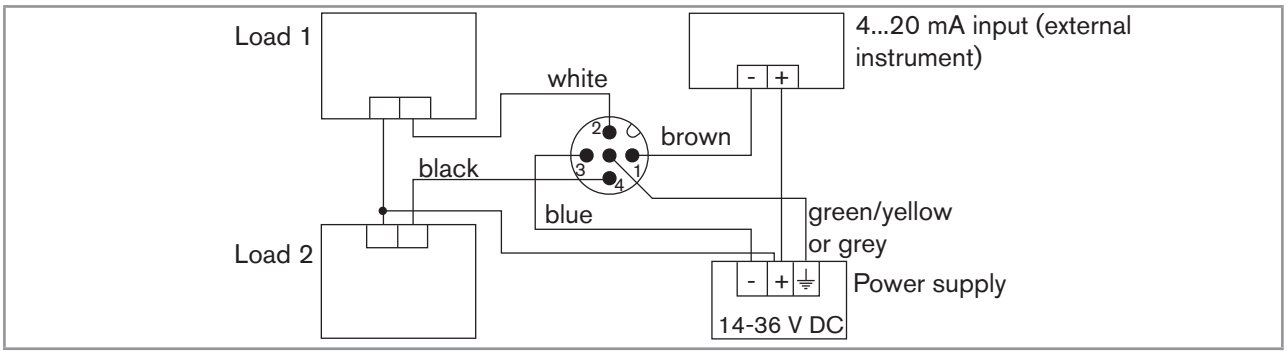

Fig. 25 : *NPN wiring of both transistor outputs and wiring the current output in sinking mode (parameter setting "NPN/sink"), device variant with 1 M12 fixed connector*

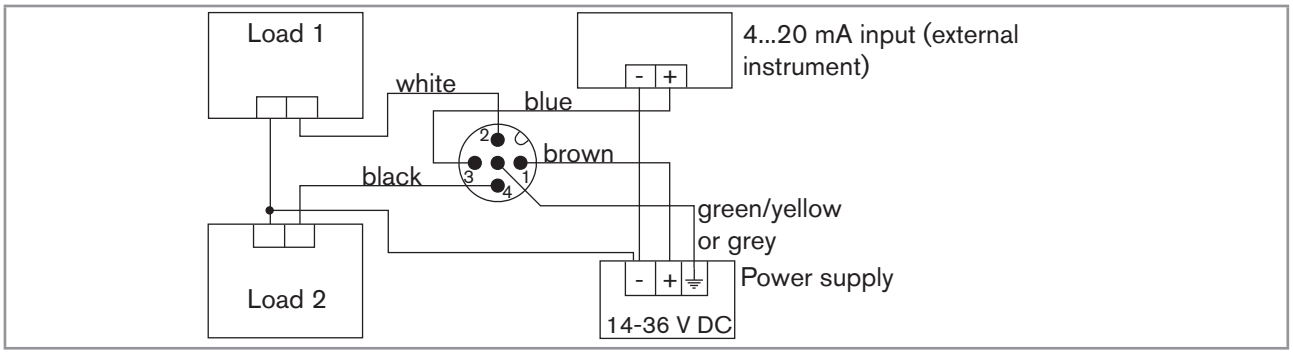

Fig. 26 : *PNP wiring of both transistor outputs and wiring the current output in sourcing mode (parameter setting "PNP/source"), device variant with 1 M12 fixed connector*

8.5.5 Wiring a device variant with two M12 fixed connectors, two transistor outputs and two current outputs

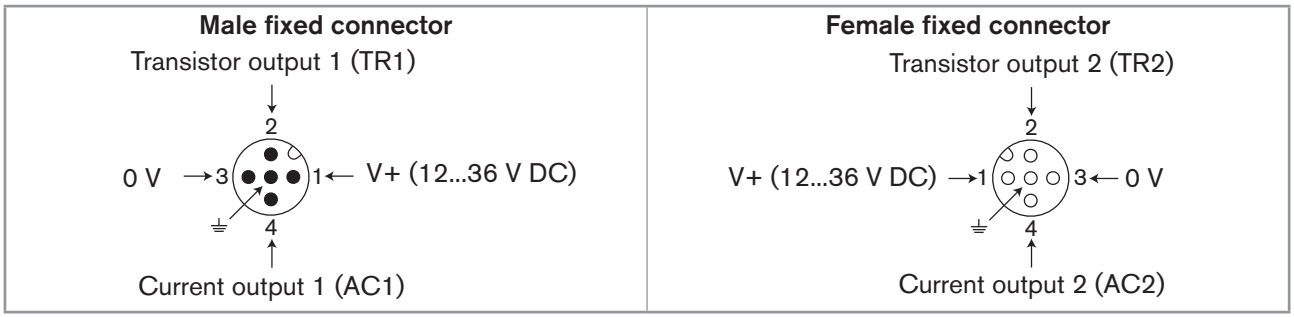

Fig. 27 : *Pin assignment of the male and female M12 fixed connectors*

Connect the power supply for the device to the male fixed connector; the supply is then transferred internally to pins 1 and 3 of the female fixed connector in order to ease wiring of the load to the female fixed connector.

MAN 1000182212 EN Version: D Status: RL (released | freigegeben) printed: 08.09.2021

Pin of the female or male M12 cables available as accessories (article number 438680 respectively 559177)	Colour of the wire
1	brown
2	white
3	blue
4	black
5	green/yellow or grey

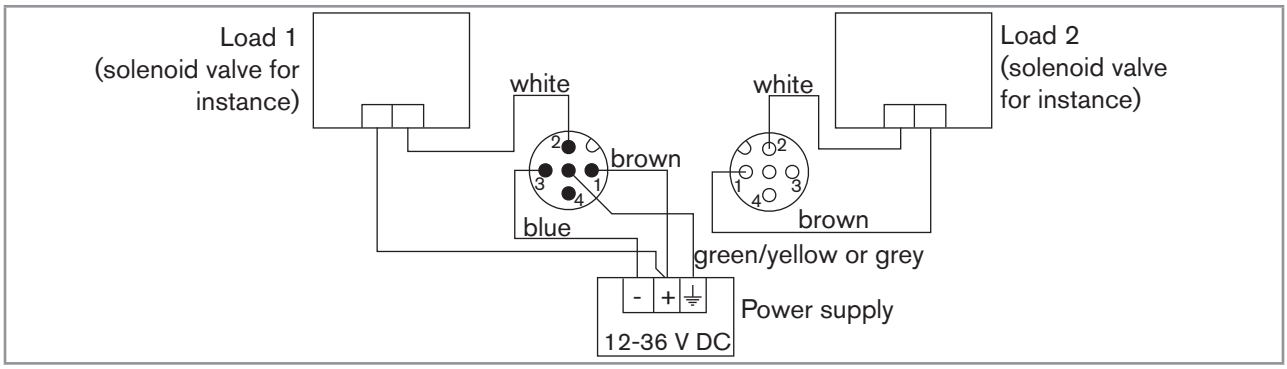

Fig. 28 : *NPN wiring of both transistor outputs (parameter setting "NPN/sink"), device variant with 2 M12 fixed connectors*

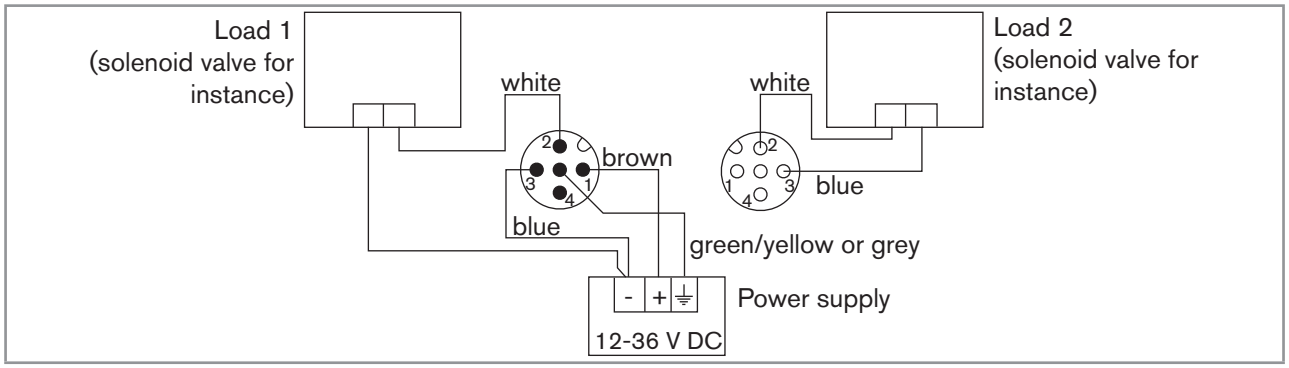

Fig. 29 : *PNP wiring of both transistor outputs (parameter setting "PNP/source"), device variant with 2 M12 fixed connectors*

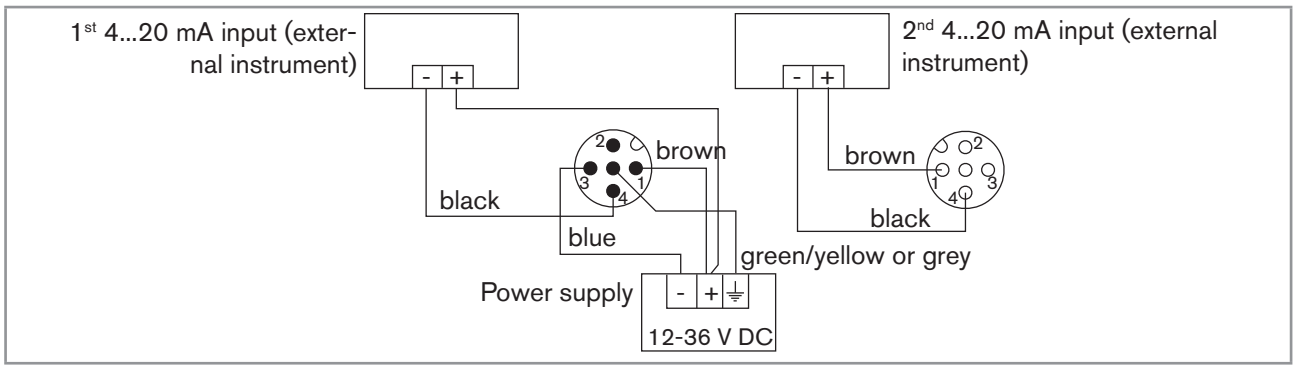

Fig. 30 : *Wiring of both current outputs in sinking mode (parameter setting "NPN/sink"), device variant with 2 M12 fixed connectors*

MAN 1000182212 EN Version: D Status: RL (released | freigegeben) printed: 08.09.2021

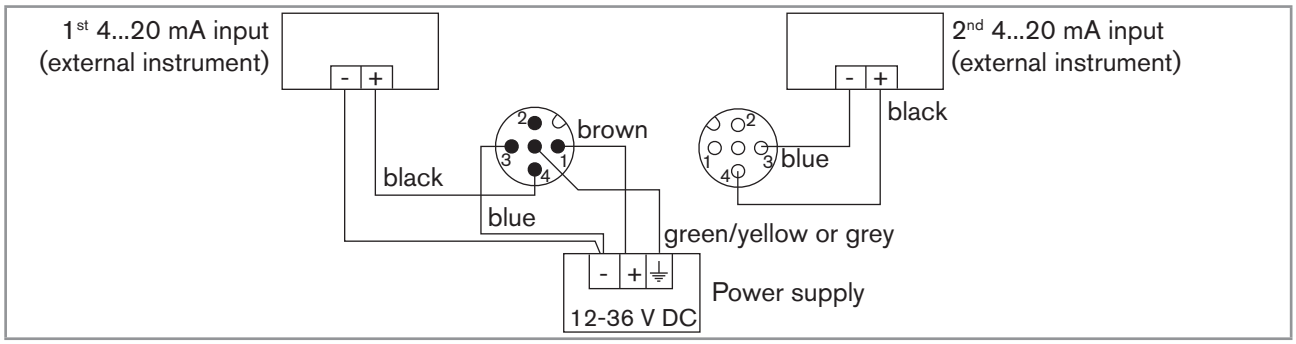

Fig. 31 : *Wiring of both current outputs in sourcing mode (parameter setting "PNP/source"), device variant with 2 M12 fixed connectors*

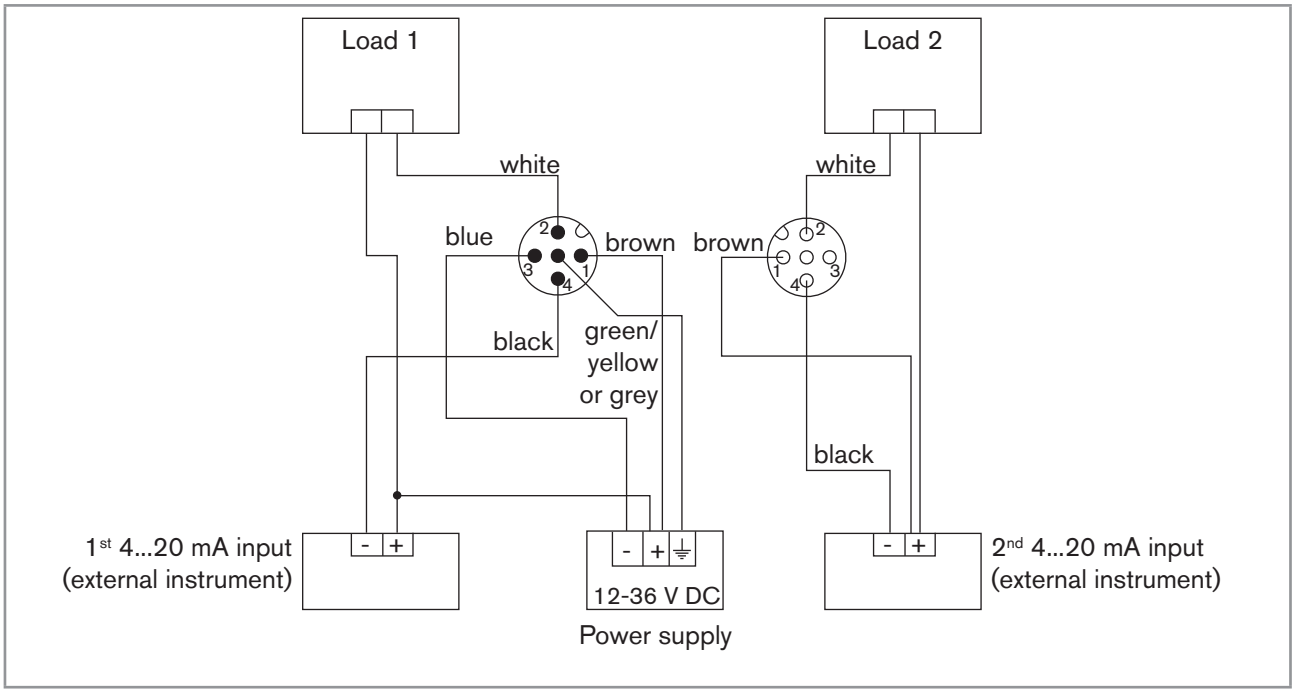

Fig. 32 : *NPN wiring of both transistor outputs and wiring of both current outputs in sinking mode (parameter setting "NPN/sink"), device variant with 2 M12 fixed connectors*

MAN 1000182212 EN Version: D Status: RL (released | freigegeben) printed: 08.09.2021

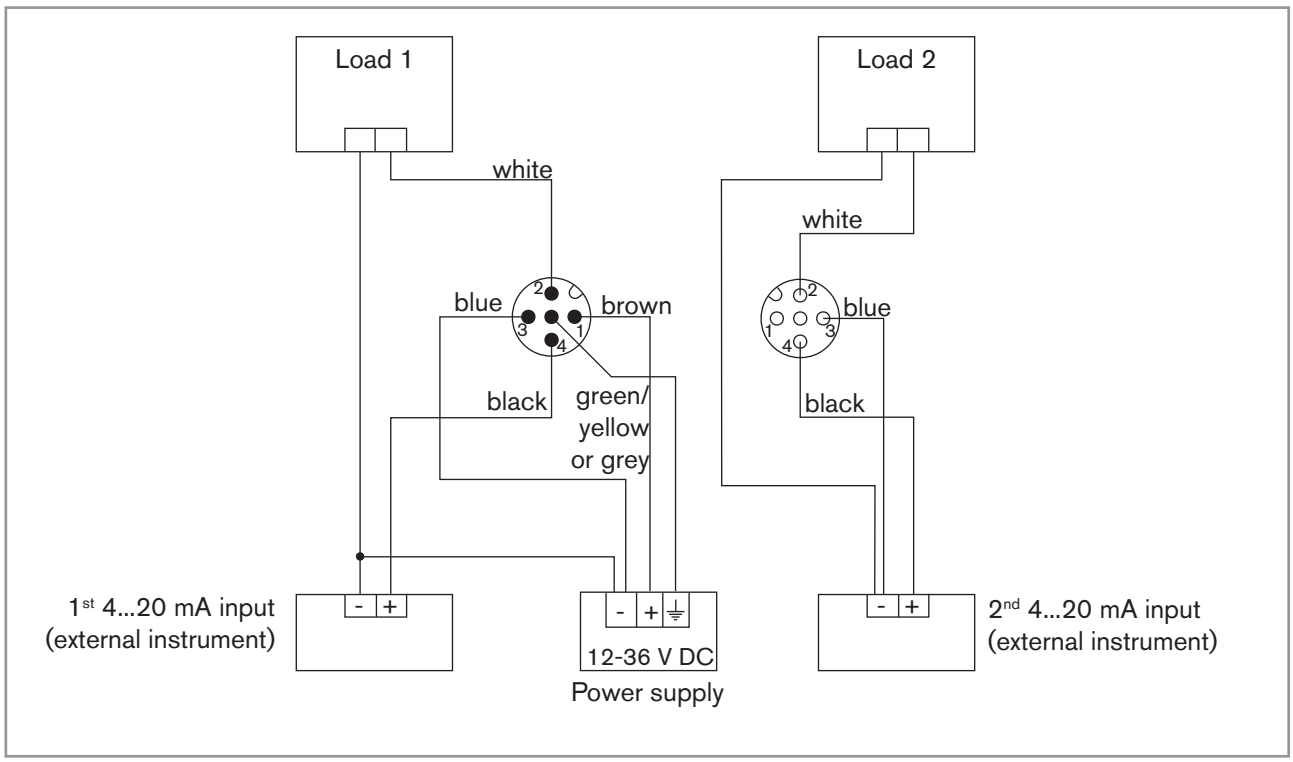

Fig. 33 : *PNP wiring of both transistor outputs and wiring of both current outputs in sourcing mode (parameter setting "PNP/source"), device variant with 2 fixed connectors*

MAN 1000182212 EN Version: D Status: RL (released | freigegeben) printed: 08.09.2021

9 ADJUSTMENT AND START-UP

- The settings can only be done on a device with a display module.
- Do not remove the display module while making the settings on the device.

9.1 Safety instructions

WARNING

Risk of injury due to non-conforming adjustment.

Non-conforming operating could lead to injuries and damage the device and its surroundings.

- The operators in charge of adjustment must have read and understood the contents of the Operating Instructions.
- In particular, observe the safety recommendations and intended use.
- The device/installation must only be adjusted by suitably trained staff.

WARNING

Danger due to non-conforming start-up.

Non-conforming start-up could lead to injuries and damage the device and its surroundings.

- Before start-up, make sure that the staff in charge have read and fully understood the contents of the Operating Instructions.
- In particular, observe the safety recommendations and intended use.
- The device/installation must only be commissioned by suitably trained staff.
- Set the correction factor of the fitting used. Refer to chpt. 9.12.5.

9.2 Knowing the operating levels

The device has 2 operating levels:

Process level

This level is used:

- to read the value of the measured flow rate and/or the sensor input frequency
- to read the values of both volume totalizers
- to reset totalizer 2
- to read both the lowest and highest values of the flow rate or the input frequency that has been measured by the device since the latest reset (this feature is not active by default),
- to reset both the lowest and highest values of the flow rate or the input frequency, if the feature has been activated
- to read the current values emitted on the 4...20 mA outputs
- to know the status of the device and the status of the sensor thanks to the relevant icons.

MAN 1000182212 EN Version: D Status: RL (released | freigegeben) printed: 08.09.2021

Configuration level

This level comprises 5 menus:

Menu title	Relevant icon
"Param": see chpt. 9.11	
"Calib": see chpt. 9.12	
"Diagnostic": see chpt. 9.13	
"Test": see chpt. 9.14	
"Info": see chpt. 9.15	

9.3 Using the navigation button

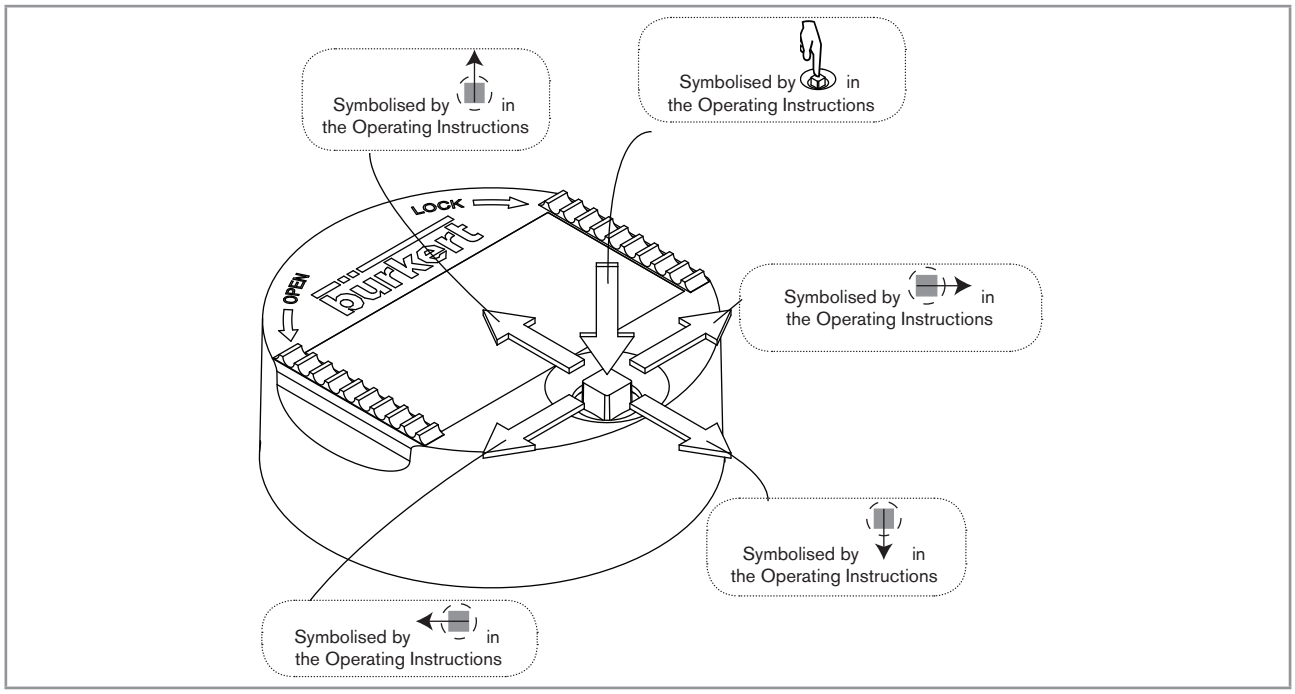

Fig. 34 : Using the navigation button

MAN 1000182212 EN Version: D Status: RL (released | freigegeben) printed: 08.09.2021

You want to...	Press...
...browse in Process level	▪ next screen: ▪ previous screen:
▪ ...access the Configuration level ▪ ...display the Param menu	for at least 2 sec., from any screen of the Process level
...browse in the menus of the Configuration level	▪ next menu: ▪ previous menu:
...access the menu displayed	
...browse in the menu functions	▪ next function: ▪ previous function:
...select the highlighted function	
...browse in the dynamic functions bar (MEAS, BACK, ABORT, OK, YES, NO)	▪ next function: ▪ previous function:
...confirm the highlighted dynamic function	
...modify a numerical value	
- increment the figure selected	-
- decrement the figure selected	-
- select the previous figure	-
- select the next figure	-
- allocate the "+" or "-" sign to the numerical value	- to the extreme left of the numerical value then until the desired sign is displayed
- move the decimal point	- to the extreme right of the numerical value then until the decimal point is in the desired place

MAN 1000182212 EN Version: D Status: RL (released | freigegeben) printed: 08.09.2021

9.4 Using the dynamic functions

You want to...	Choose...
...go back to the Process level, without validating the modifications made	dynamic function "MEAS"
...confirm the entering	dynamic function "OK"
...go back to the parent menu	dynamic function "BACK"
...abort the current operation and go back to the parent menu	dynamic function "ABORT"
...answer the question asked	dynamic function "YES" or "NO"

9.5 Entering a numerical value (example)

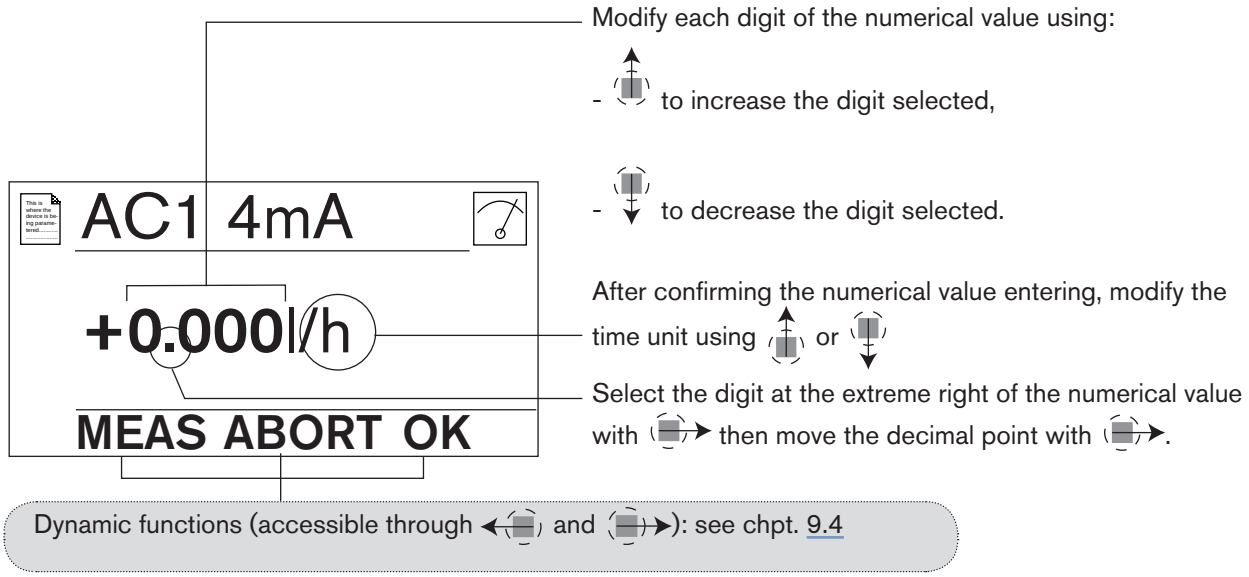

9.6 Browsing in a menu (example)

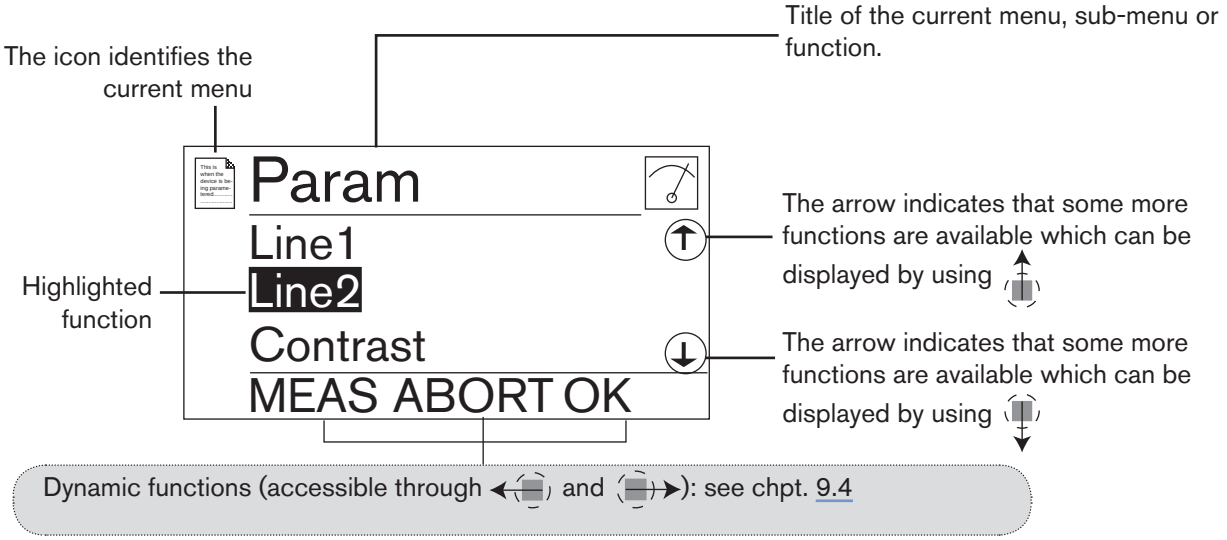

MAN 1000182212 EN Version: D Status: RL (released | freigegeben) printed: 08.09.2021

9.7 Knowing the display

9.7.1 Knowing the display at the power-up of the device

When the device is powered up or the display module mounted on the transmitter, the display indicates the software version of the display module. The display then shows the first screen of the Process level:

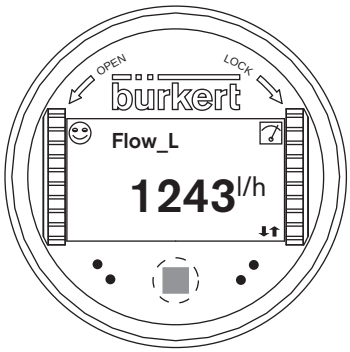

See chpt. 9.11.4 to 9.11.7 to choose the data to be displayed in the Process level.

If the message “ERROR - This display does not support this Element - Contact Bürkert” is displayed, the version of the display module is not compatible with the software version of the device. Contact your local Bürkert sales office.

Fig. 35 : Display indications after power-up of the device

9.7.2 Knowing the icons and LEDs

The display module is not available on all device variants of the device. The display module is can be ordered as an accessory. Refer to chpt. 11.

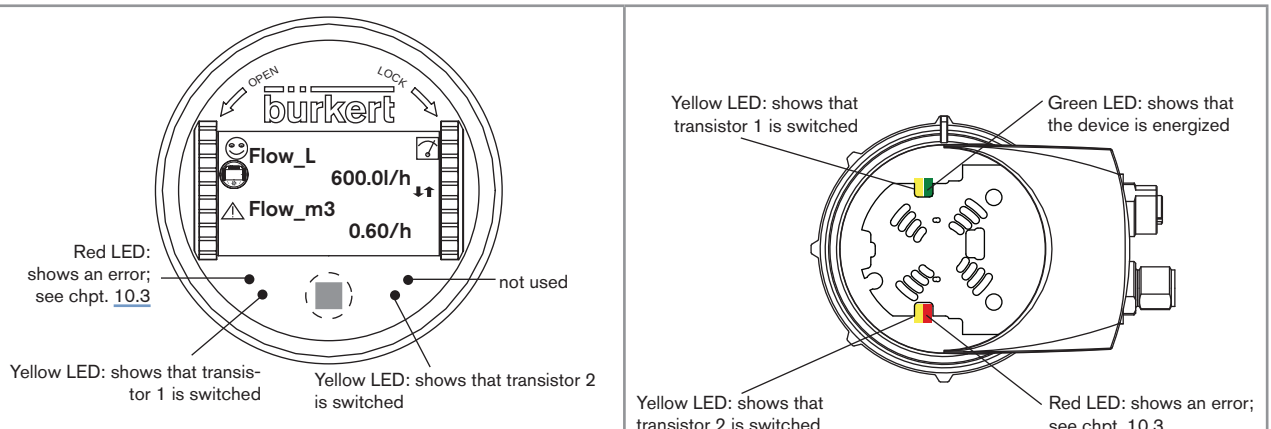

Fig. 36 : Position of the icons and description of the LEDs

- The LEDs of the display module are duplicated on the electronic board that is located under the display module: these LEDs can only be seen if the device has no display module.
- The yellow LED related to a transistor output is deactivated if the transistor output is configured in pulse mode ("Pulse").

MAN 1000182212 EN Version: D Status: RL (released | freigegeben) printed: 08.09.2021

Icon	Meaning and alternatives
☺	Sensor input frequency within the defined ranges The alternatives, in this position, if monitoring of the sensor input frequency is activated, are: ▪ ☺, associated with ⚠: see chpt. 9.13.2 and chpt. 10.3 ▪ ☹, associated with ERR: see chpt. 9.13.2 and chpt. 10.3
	The device is measuring. The alternative icons in this position are: ▪ ⚠ HOLD flashing: HOLD mode activated. See chpt 9.12.1. ▪ T : running check that the outputs are working and behaving correctly. See 9.14.2 and 9.14.3.
⚠	"warning" message ; see chpt. 9.13.2 and chpt. 10.3
ERR	"error" message ; see chpt. 9.13.2 and chpt. 10.3

MAN 1000182212 EN Version: D Status: RL (released | freigegeben) printed: 08.09.2021

9.8 Knowing the Process level

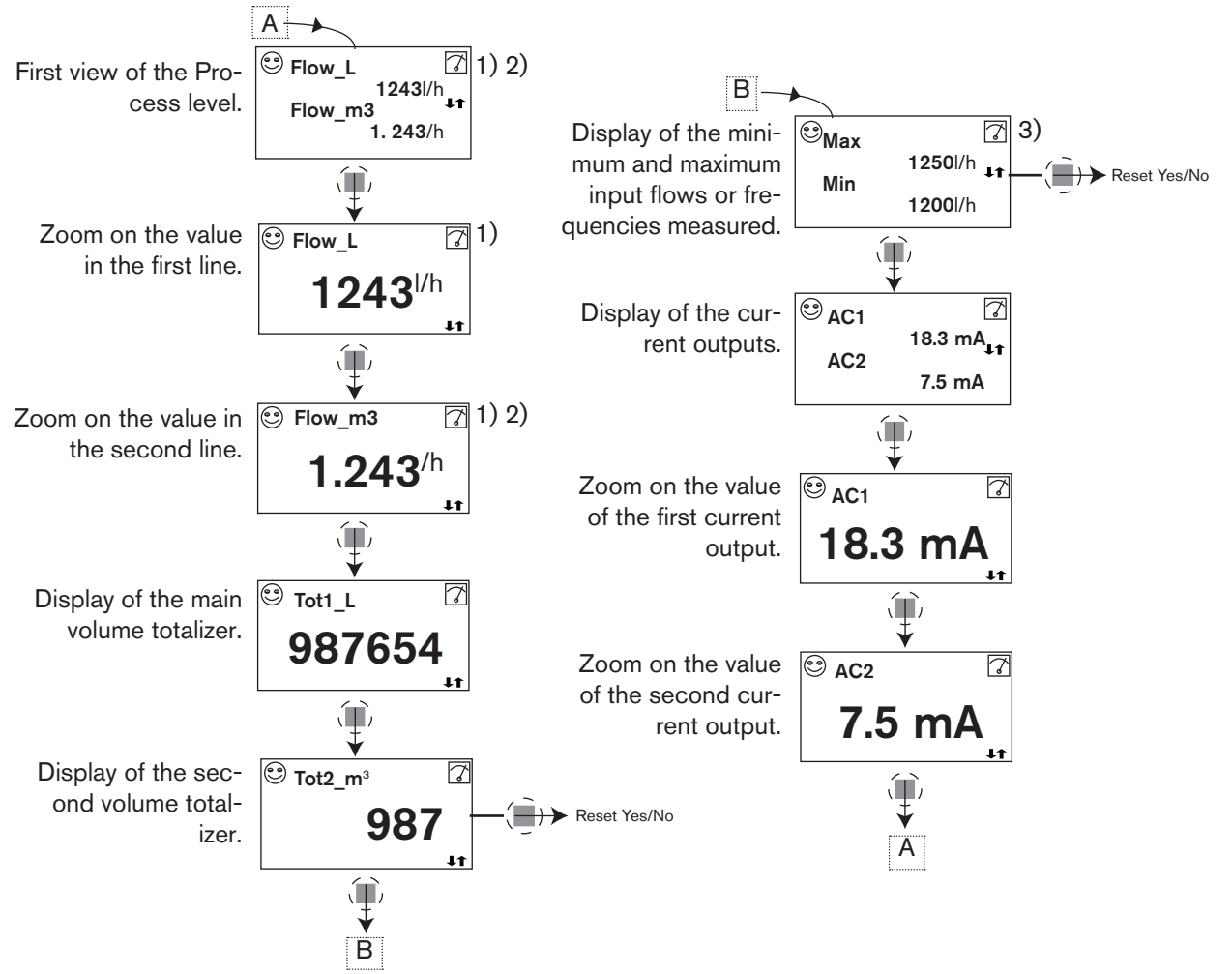

[1] These displays appear if line 1 and line 2 are activated. Only line 1 is activated by default. To activate/deactivate these displays or choose the parameters to be displayed, see chpt. 9.11.4.

[2] Only the time unit is displayed when the PVAR chosen is "Flow_m3", "Flow_gal" or "Flow_lgal".

[3] Display of the minimum and maximum flow rates in the Process level is deactivated by default. To activate it, see chpt. 9.11.6

MAN 1000182212 EN Version: D Status: RL (released | freigegeben) printed: 08.09.2021

9.9 Accessing the Configuration level

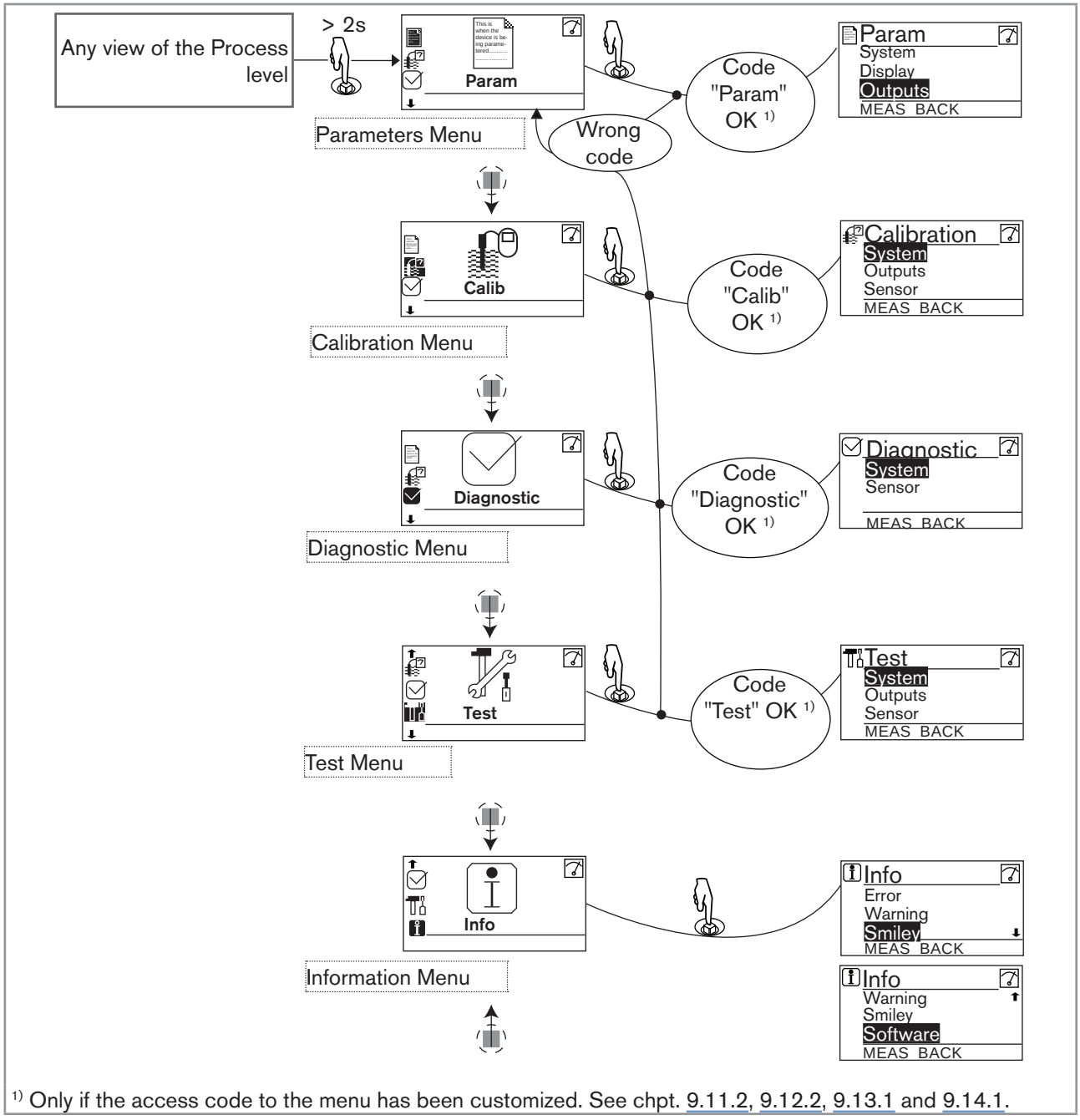

1) Only if the access code to the menu has been customized. See chpt. 9.11.2, 9.12.2, 9.13.1 and 9.14.1.

→ See chpt. 9.10 for the detailled functions.

MAN 1000182212 EN Version: D Status: RL (released | freigegeben) printed: 08.09.2021

9.10 Knowing the structure of the Configuration menus

See chpt. 9.9 to access the Configuration level.

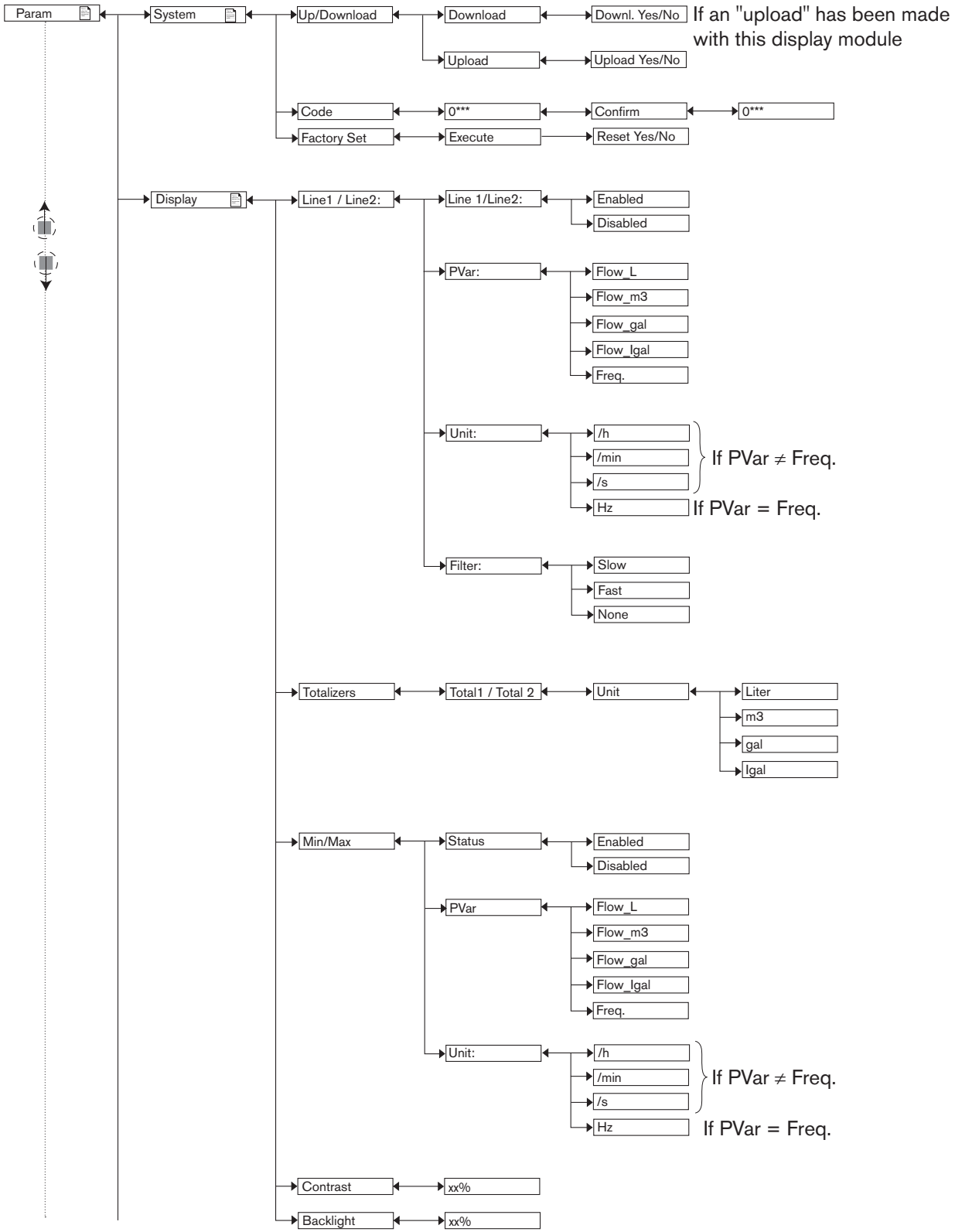

MAN 1000182212 EN Version: D Status: RL (released | freigegeben) printed: 08.09.2021

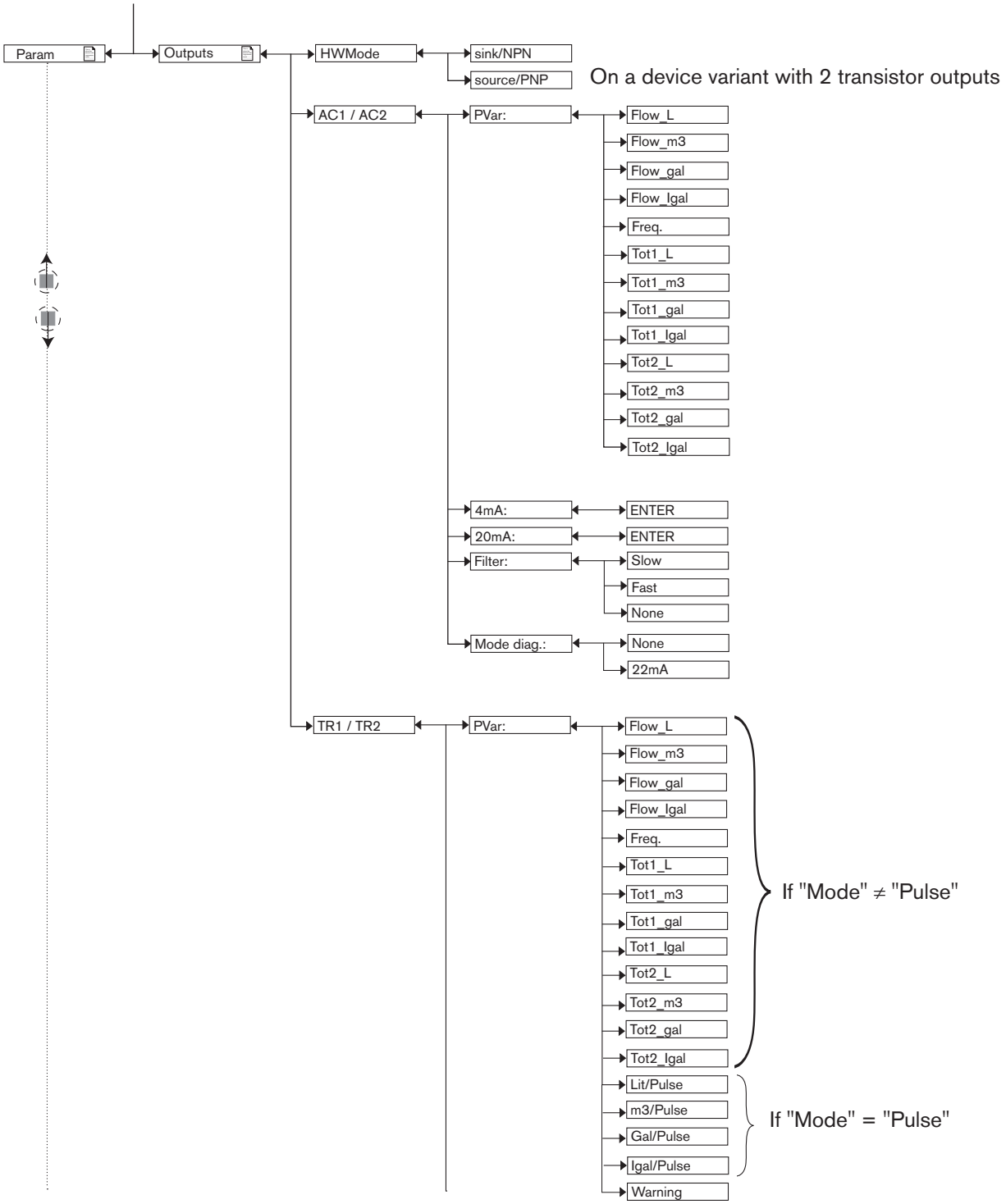

MAN 1000182212 EN Version: D Status: RL (released | freigegeben) printed: 08.09.2021

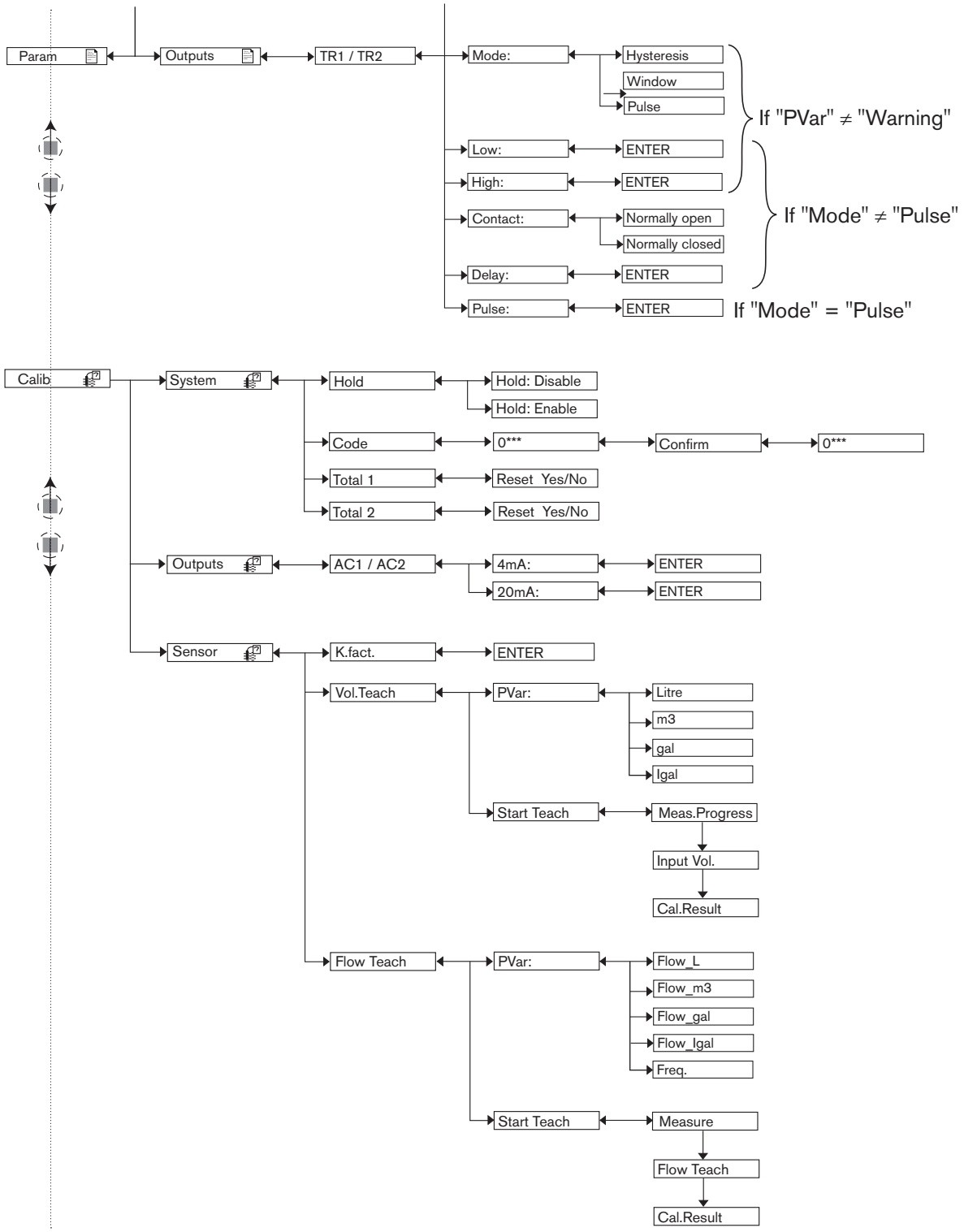

MAN 1000182212 EN Version: D Status: RL (released | freigegeben) printed: 08.09.2021

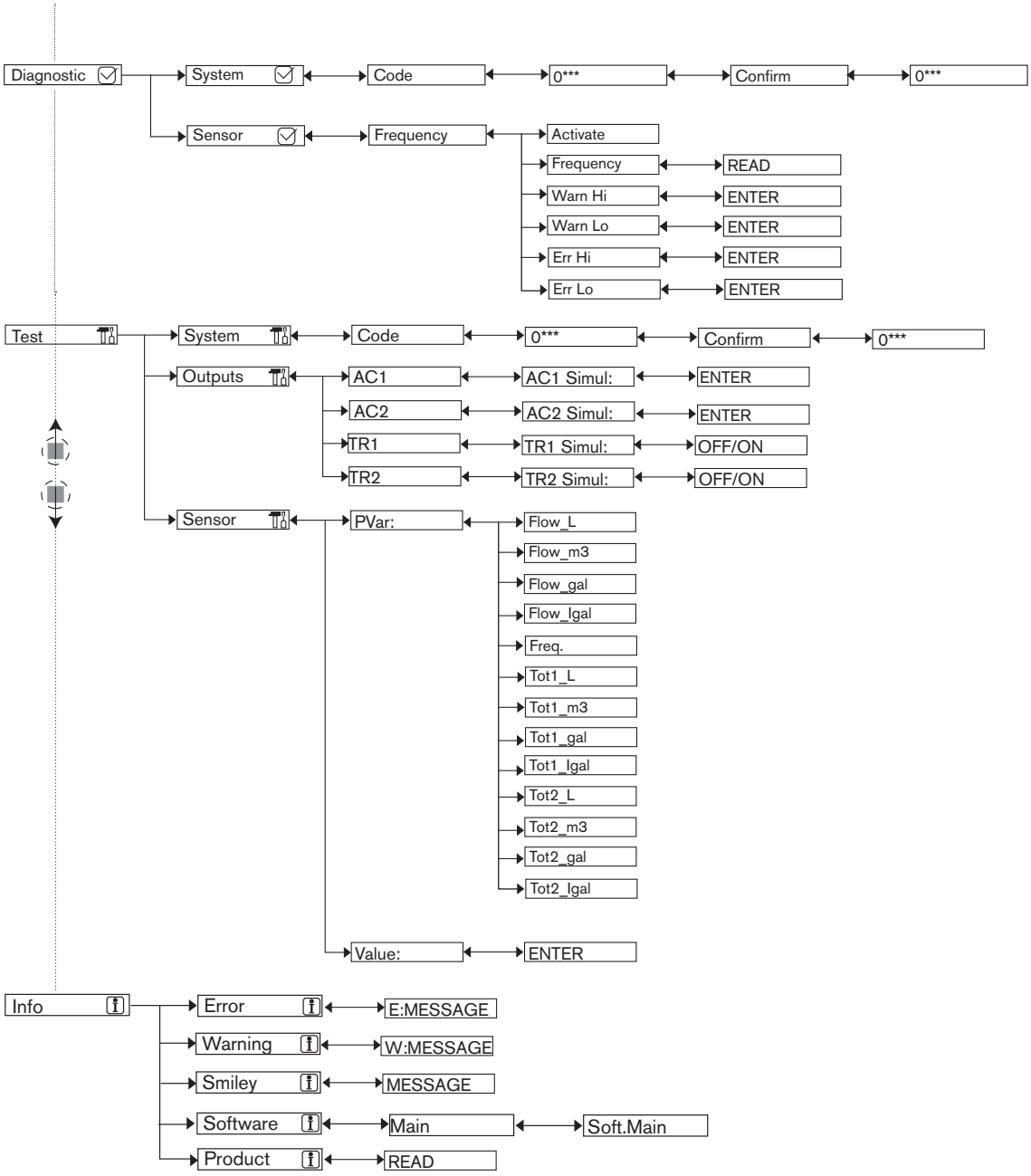

MAN 1000182212 EN Version: D Status: RL (released | freigegeben) printed: 08.09.2021

9.11 Knowing the menu Parameter

9.11.1 Transferring data from one device to another

See chpt. 9.9 to access the Parameters menu.

This function is only possible with a display module with software version V2.

→ On the device, check the software version in the menu "Info -> Software -> Main".

- The software version of the display module is displayed when the display module is powered up.

- Function "DOWNLOAD" is only present if an "UPLOAD" has been successfully carried out.
- Never interrupt a data transfer else the device could be damaged.

The following data can be transferred from a device to another device of the same type:

- user set data of the PARAM menu (except the date, the time, the contrast and brightness levels for the display),
- the K-factor of the fitting,
- user set data of the DIAGNOSTIC menu,
- the access codes to the menus.

DOWNLOAD: transfer the data previously uploaded in the display module by means of the "UPLOAD" function. The parameters transferred are used by the device as soon as the message “Download OK” is displayed.

UPLOAD: upload data from the device to the display module.

9.11.2 Modifying the PARAM menu access code

See chpt. 9.9 to access the Parameters menu.

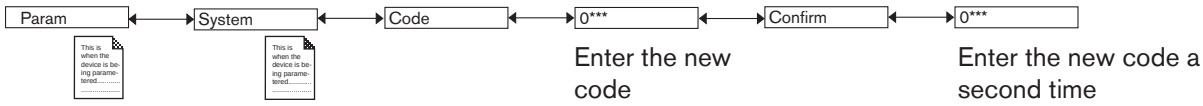

If the default code (0000) is entered, the code will not be requested to access the menu.

MAN 1000182212 EN Version: D Status: RL (released | freigegeben) printed: 08.09.2021

9.11.3 Restoring the default parameters of the Process level and the outputs

See chpt. 9.9 to access the Parameters menu.

The following data can be restored to their default value:

- user set data of the PARAM menu (except the date, the time, the contrast and brightness levels for the display),
- K-factor of the fitting,
- user set data of the DIAGNOSTIC menu,
- the access codes to the menus.

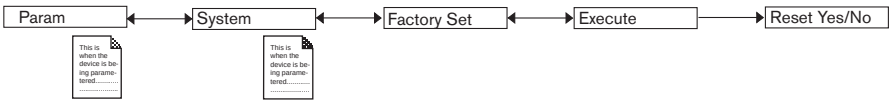

→ Choose “Yes” to restore the default parameters.

→ Choose “No” to keep the current parameters.

9.11.4 Setting the data displayed in Process level

See chpt. 9.9 to access the Parameters menu.

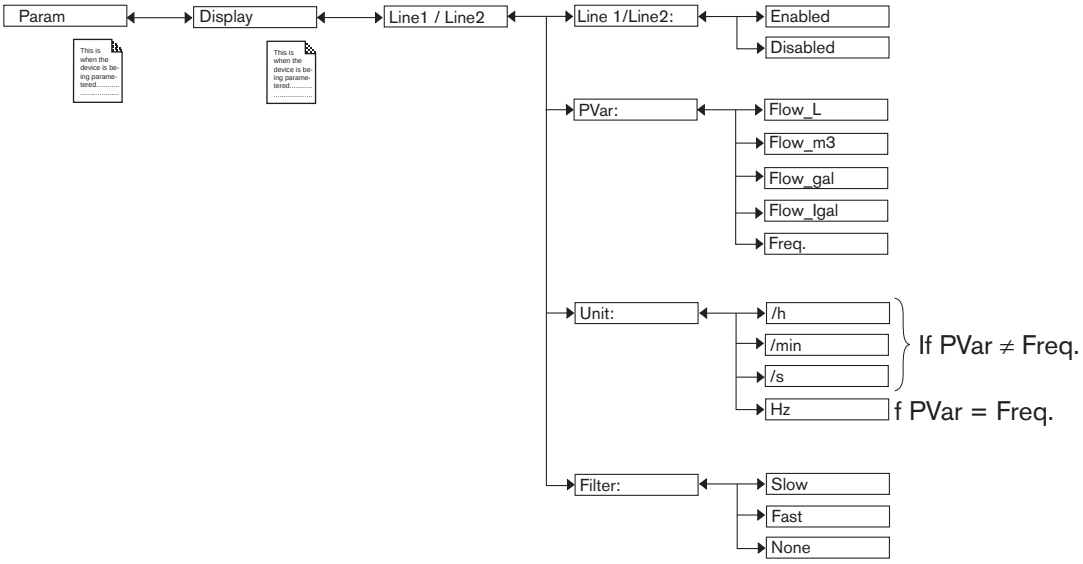

Activate or deactivate line 1 or line 2 respectively in Process level.

LINE1 or LINE2: Activate (choice “Enabled”) or deactivate (choice “Disabled”) the display of line 1 or line 2 respectively.

Set the parameters of the data displayed in Process level on line 1 or line 2 respectively when the corresponding line is activated:

PVAR: Choose the flow rate volume unit or the input frequency to be displayed on line 1 or line 2 of the display respectively.

UNIT: Choose the preferred time unit in which the flow rate is displayed.

MAN 1000182212 EN Version: D Status: RL (released | freigegeben) printed: 08.09.2021

Take care to choose the time unit according to the flow rate in the pipes as the display indicates a maximum flow rate of 9999 volume units/time unit (see Tab. 4).

Tab. 4 : Displayed flow rate per unit time

Selected time unit	Measured flow rate	Displayed flow rate
/h (default setting)	≥ 0 volume units**/h** and ≤ 9999 volume units**/h**	0 to 9999 volume units**/h**
	≥ 10000 volume units**/h**	10000/60 volume units**/min** to 9999 volume units**/min**, i.e. 166,66 volume units**/min** to 9999 volume units**/min**
	≥ 10000 volume units**/min**	10000/60 volume units**/s** to 9999 volume units**/s**, i.e. 166,66 volume units**/s** to 9999 volume units**/s**
/min	< 1 volume units**/min**	0 to 59,99 volume units**/h**
	≥ 1 volume units**/min** and ≤ 9999 volume units**/min**	1 to 9999 volume units**/min**
	≥ 10000 volume units**/min**	10000/60 volume units**/s** to 9999 volume units**/s**, i.e. 166,66 volume units**/s** to 9999 volume units**/s**
/s	< 1 volume units**/min**	0 to 59.99 volume units**/h**
	≥ 1 volume units**/min** and < 60 volume units/**min**	1 to 59,99 volume units**/min**
	≥ 1 volume units**/s** and ≤ 9999 volume units**/s**	1 to 9999 volume units/**s**

Attenuate the measurement variations on the display

FILTER: choose the level of damping for the flow rate or frequency measured values displayed on the line selected. Three levels of damping are proposed: "slow" (slow filter), "fast" (fast filter) or "none" (no filter).

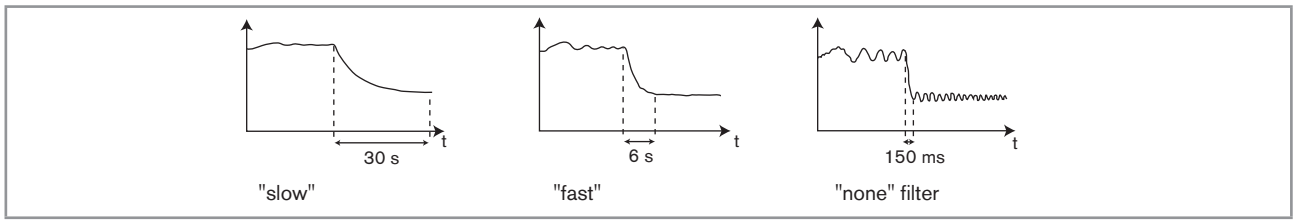

Fig. 37 : Filter curves

9.11.5 Choosing the units for the totalizers displayed in Process level

See chpt. 9.9 to access the Parameters menu.

The totalizers are saved if a power cut occurs.

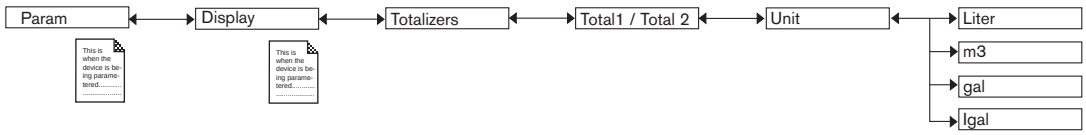

UNIT: Choose the volume unit in which the value of totalizer 1 and totalizer 2 respectively is displayed.

MAN 1000182212 EN Version: D Status: RL (released | freigegeben) printed: 08.09.2021

9.11.6 Displaying the lowest and highest values measured

See chpt. 9.9 to access the Parameters menu.

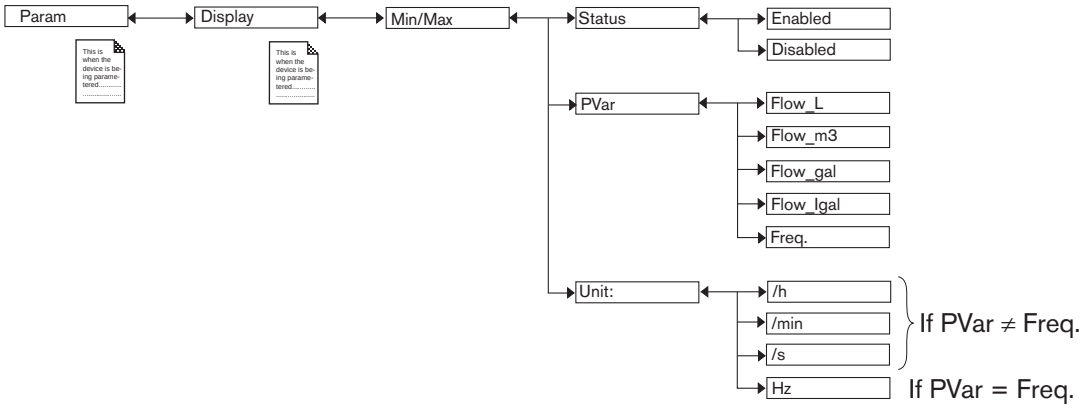

STATUS: Choose to display (choice “Enabled”) or not display (choice “Disabled”) the minimum and maximum values measured since the last reset.

PVAR: Choose a physical parameter (volume unit of the flow rate or input frequency), the minimum and maximum measured values which are displayed in Process level.

UNIT: Choose the preferred time unit in which the min. and max. measured flow rate values are displayed.

Take care to choose the time unit according to the flow rate in the pipes as the display indicates a maximum flow rate of 9999 volume units/time units. See chpt. 9.11.4.

9.11.7 Setting the display contrast and brightness

See chpt. 9.9 to access the Parameters menu.

On a device variant with a single M12 fixed connector and if the power supply is lower than 15 V, do not increase the backlight over 30%, to not influence the 4...20 mA current output.

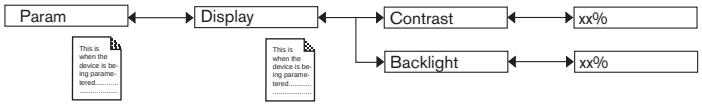

Set percentage using and .

CONTRAST: Choose the display contrast level (as a %).

BACKLIGHT: Choose the light intensity of the display (as a %).

These settings only affect the display module. They are not factored in during a device data UPLOAD. Refer to chpt. 9.11.1.

MAN 1000182212 EN Version: D Status: RL (released | freigegeben) printed: 08.09.2021

9.11.8 Choosing the output wiring mode

See chpt. 9.9 to access the Parameters menu.

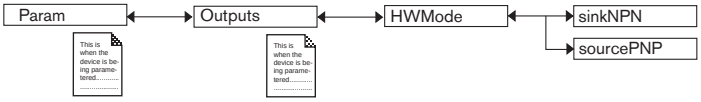

On a device variant with an NPN transistor output and a current output, only the choice “sink/NPN” is possible.

The setting has no effect on a device variant with one fixed connector, 2 transistor outputs and a single current output, if the sole current output is wired. Refer to Fig. 19 in chpt. 8.5.3.

The wiring mode is the same for all outputs.

→ If “sink/ NPN” is set, wire the current outputs in sinking mode and the transistor outputs in NPN.

→ If “source/ PNP” is set, wire the current outputs in sourcing mode and the transistor outputs in PNP.

See chpt. "8.5 Wiring".

9.11.9 Setting the parameters of the current outputs

See chpt. 9.9 to access the Parameters menu.

The 2nd current output "AC2" is only available on a device variant with 2 current outputs.

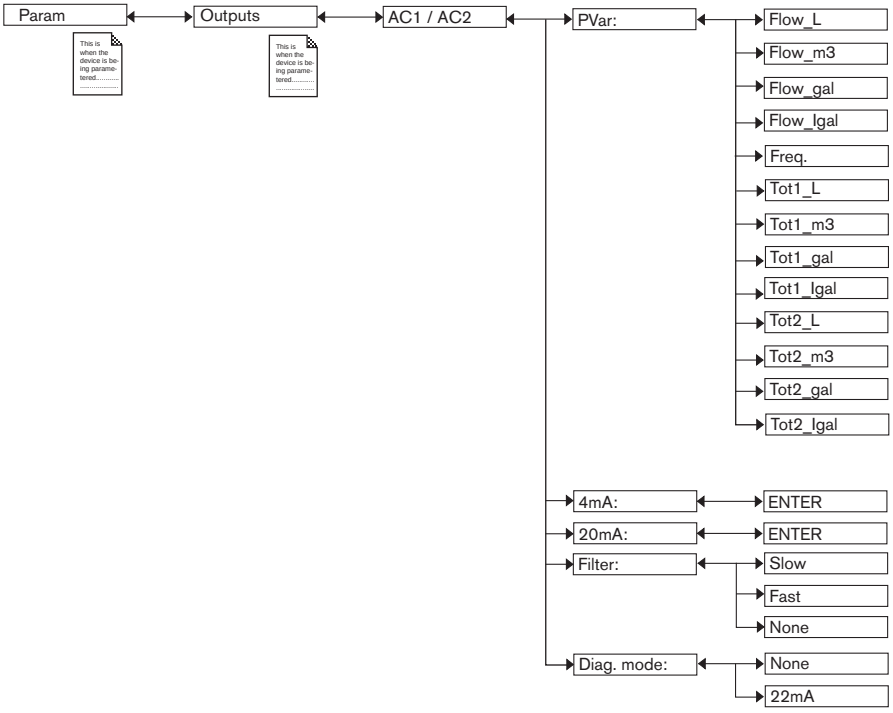

MAN 1000182212 EN Version: D Status: RL (released | freigegeben) printed: 08.09.2021

PVAR: Choose a physical parameter (flow rate volume unit or input frequency) or a totalizer combined with current output 1 or current output 2 respectively.

Functions "4mA" and "20mA" are used to define the measurement range for the flow rate, the input frequency or the totalizer associated with the current on the 4...20 mA output.

P_1 and P_2 are the values associated with a current of 4 mA or 20 mA respectively:

If P_1 is higher than P_2, the signal is inverted and the range P_1-P_2 corresponds to the range for the 20...4 mA current.

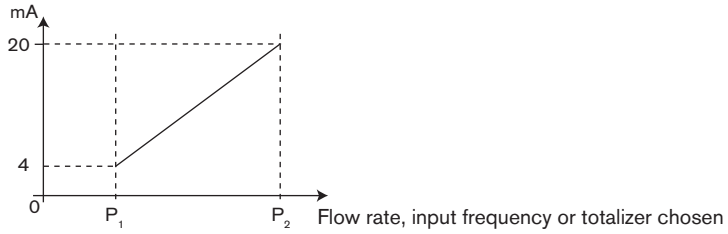

Fig. 38 : 4...20 mA current depending on the chosen physical parameter or totalizer

4mA: Choose the value of the physical parameter or the totalizer (previously selected) and the flow time unit, combined with a current of 4 mA for each current output.

20mA: Choose the value of the physical parameter or the totalizer (previously selected) and the flow time unit, combined with a current of 20 mA for each current output.

FILTER: choose the level of damping for the fluctuations of the current value for each current output. Three damping levels are proposed: slow, fast or none. The damping for the current outputs is similar to the damping of the display (see Fig. 37).

MODE DIAG: choose to emit a current of 22 mA on the current output selected when an "error" event related to diagnostics (see chpt. 9.13.2) is generated by the device or allow the current output to operate normally (choose "none").

An "error" event linked to a malfunction of the device is always indicated by the generation of a 22 mA current, whatever the adjustment made in the function "MODE DIAG".

See also chpt. "10.3 Solving problems"

MAN 1000182212 EN Version: D Status: RL (released | freigegeben) printed: 08.09.2021

9.11.10 Setting the parameters of the transistor outputs

See chpt. 9.9 to access the Parameters menu.

The 2nd transistor output "TR2" is only available on a device variant with 2 transistor outputs.

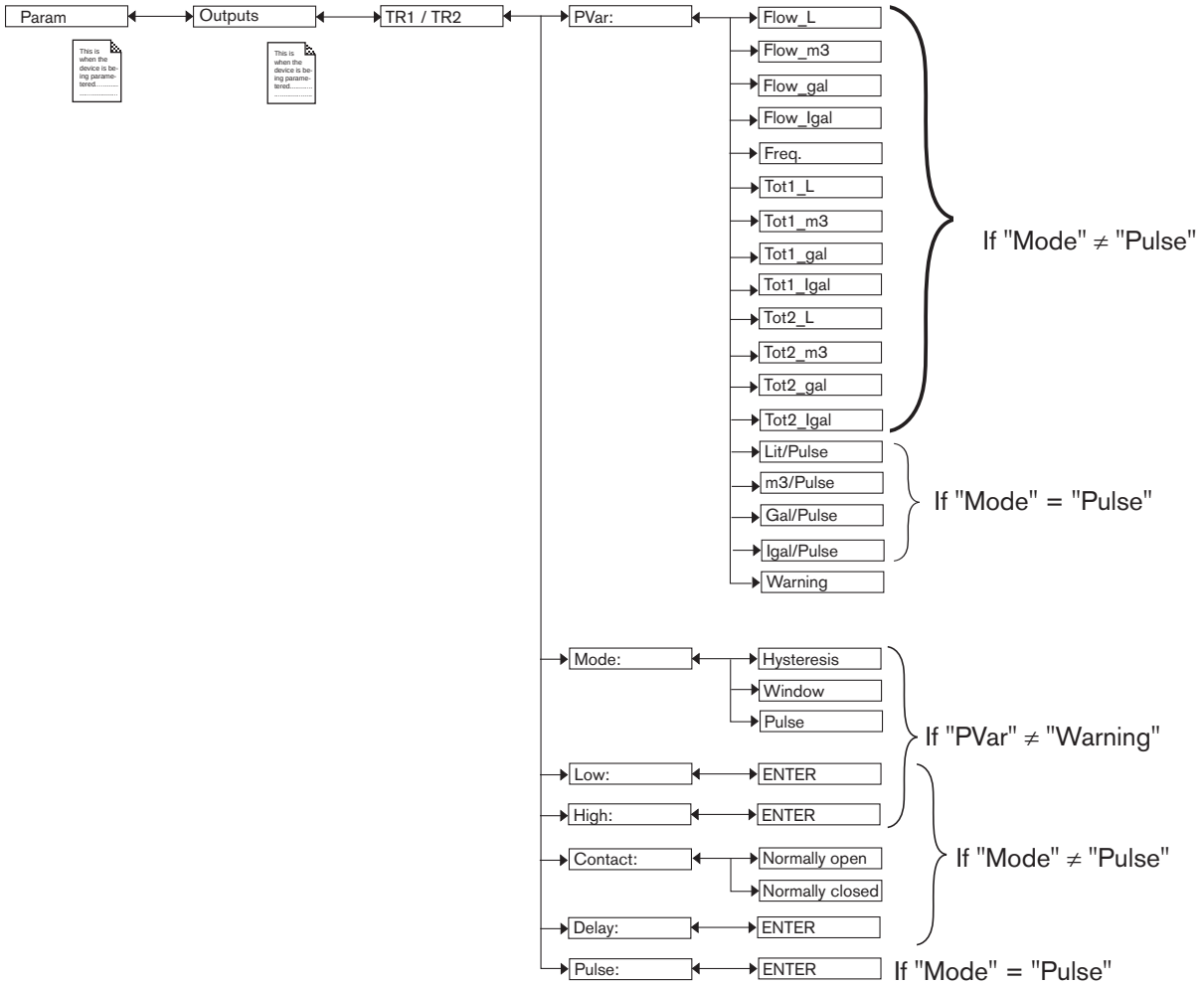

PVAR: Choose a physical parameter (flow rate volume unit or input frequency) or a totalizer associated with a transistor output or associate the “warning” event (see chpt. 9.13.2) with transistor output.

If the selected transistor output is linked to the "warning" event, the transistor switches as soon as such an event is generated by the device.

If the mode "Pulse" is selected, choose the volume unit for which a pulse must be transmitted.

MODE: Choose either the hysteresis or window operating mode, for the transistor, or operating on pulse mode (choice “Pulse”) for the transistor output.

LOW: enter the low switching threshold value for the transistor output, as well as the flow rate time unit (see details hereafter).

HIGH: enter the high switching threshold value for the transistor output, as well as the flow rate time unit (see details hereafter).

CONTACT: choose the type off-position (normally open, NO, or normally closed, NC) for the transistor output (see details hereafter).

MAN 1000182212 EN Version: D Status: RL (released | freigegeben) printed: 08.09.2021

DELAY: choose the value for the time delay prior to switching (from 0 to 60 s) for each transistor output. The time delay before switching is applicable to both switching thresholds.

Switching only occurs if one of the thresholds, high or low (functions "High" or "Low"), is exceeded for a duration longer than this time delay.

PULSE: When the choice “Pulse” is selected in MODE function above, enter here the volume of fluid for which a pulse must be transmitted on the selected transistor output.

Hysteresis operating

The output status changes when a threshold is reached:

- by increasing flow rate, the output status changes when the high threshold ("high") is reached.
- by decreasing flow rate, the output status changes when the low threshold ("low") is reached.

Fig. 39 : Hysteresis operating

Window operating (choice "Window")

The change of status occurs whenever one of the thresholds is detected.

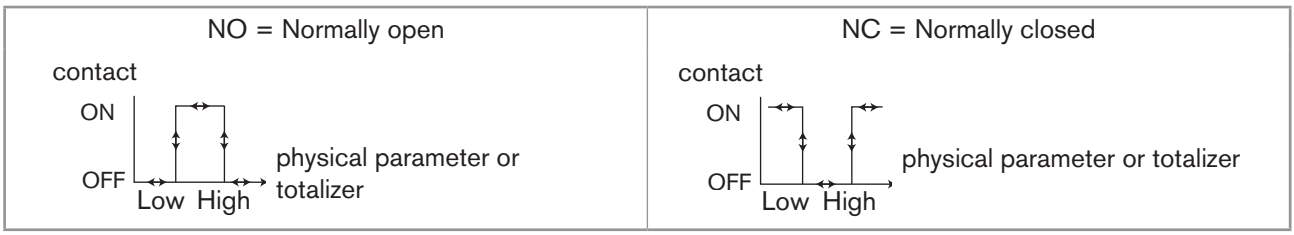

Fig. 40 : Window operating

Pulse operating (choice "Pulse")

This function is used to generate a pulse on the transistor output each time a predetermined volume of fluid passes.

Enter the desired fluid volume and, if necessary, modify the volume units/pulse in the “PULSE” function in the “Output.TR1” or “Output.TR2” menu.

- If the volume entered multiplied by the K-factor of the device > 1000000, the device emits a “Warning” event and displays the message “W:TRnPu too big”.
- If the volume entered multiplied by the K-factor of the device < 1 the device emits a “Warning” event and displays the message “W:TRnPu 1:1:set”. In this case, the pulse frequency is forced to the value of the input frequency.

MAN 1000182212 EN Version: D Status: RL (released | freigegeben) printed: 08.09.2021

9.12 Knowing the menu Calibration

9.12.1 Activating/deactivating the Hold function

See chpt. 9.9 to access the Calibration menu.

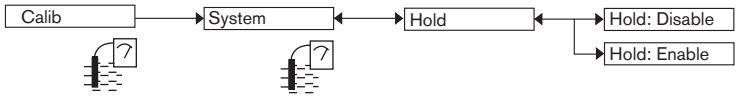

If the mode "Hold" is activated and if there is a power interruption, then, when the device restarts, the mode "Hold" is automatically deactivated.

The mode "Hold" is used to carry out maintenance work without interrupting the process.

To activate the mode HOLD:

→ access the "HOLD" function;

→ choose "enabled" and confirm by "OK".

To deactivate the mode HOLD:

→ access the "HOLD" function;

→ choose "disabled" and confirm by "OK".

In practice, when the device is in mode "Hold":

- the HOLD icon is displayed in place of the icon;
- the current emitted on each 4...20 mA output is fixed at the value of the last measurement of the physical parameter associated with each output;
- each transistor output is fixed at the status acquired at the moment the Hold function is activated;

The Hold mode has no effect on the transistor outputs when they are operating in “Pulse” mode. Refer to chpt. 9.11.10.

- the device is in Hold mode until the HOLD function is deactivated.

9.12.2 Modifying the Calibration menu access code

See chpt. 9.9 to access the Calibration menu.

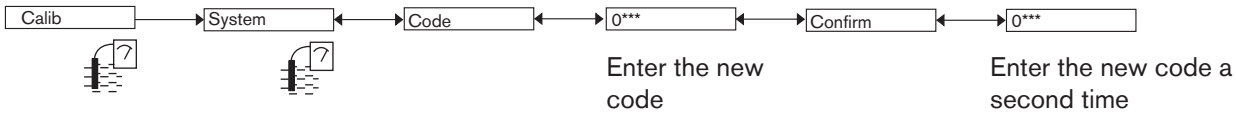

If the default code (0000) is entered, the code will not be requested to access the menu.

MAN 1000182212 EN Version: D Status: RL (released | freigegeben) printed: 08.09.2021

9.12.3 Resetting totalizer 1 or totalizer 2 respectively

See chpt. 9.9 to access the Calibration menu.

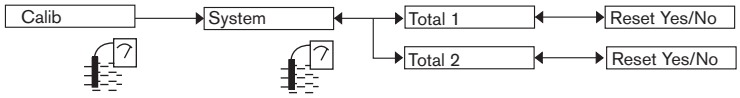

TOTAL 1 or TOTAL 2 respectively: Reset (choice “Yes”) or do not reset (choice “No”) totalizer 1 or totalizer 2 respectively.

Totalizer 2 can be reset from Process level. Refer to chpt. 9.8.

9.12.4 Adjusting the current outputs

See chpt. 9.9 to access the Calibration menu.

On a device variant with a single M12 fixed connector and if the power supply is lower than 15 V, before calibrate the current output, make sure the backlight is lower as 30 %. Refer to chpt. 9.11.7.

WARNING

Risk of injury due to wrong adjustment.

- Make sure the Hold mode is disabled. Refer to chpt. 9.12.1.

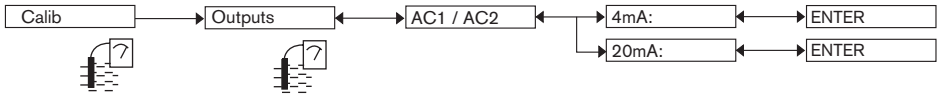

The entered values are not memorised in this menu. Only the values emitted on the current outputs are adjusted after pressing “OK” when the message “Recalibrate AC outputs?” is shown.

4mA: adjust the offset of current output 1 or current output 2.

When the "4mA" function is selected, the device generates a current of 4 mA:

→ measure the current emitted by the 4...20 mA output using a multimeter and

→ enter the value given by the multimeter in the function "AC1.4mA" or "AC2.4mA".

20mA: Adjust the span of current output 1 or current output 2.

When the "20mA" function is selected, the device generates a current of 20 mA:

→ measure the current emitted by the 4...20 mA output using a multimeter and

→ enter the value given by the multimeter in the function "AC1.20mA" or "AC2.20mA".

MAN 1000182212 EN Version: D Status: RL (released | freigegeben) printed: 08.09.2021

9.12.5 Entering the K-factor or determining it with Teach-In

See chpt. 9.9 to access the Calibration menu.

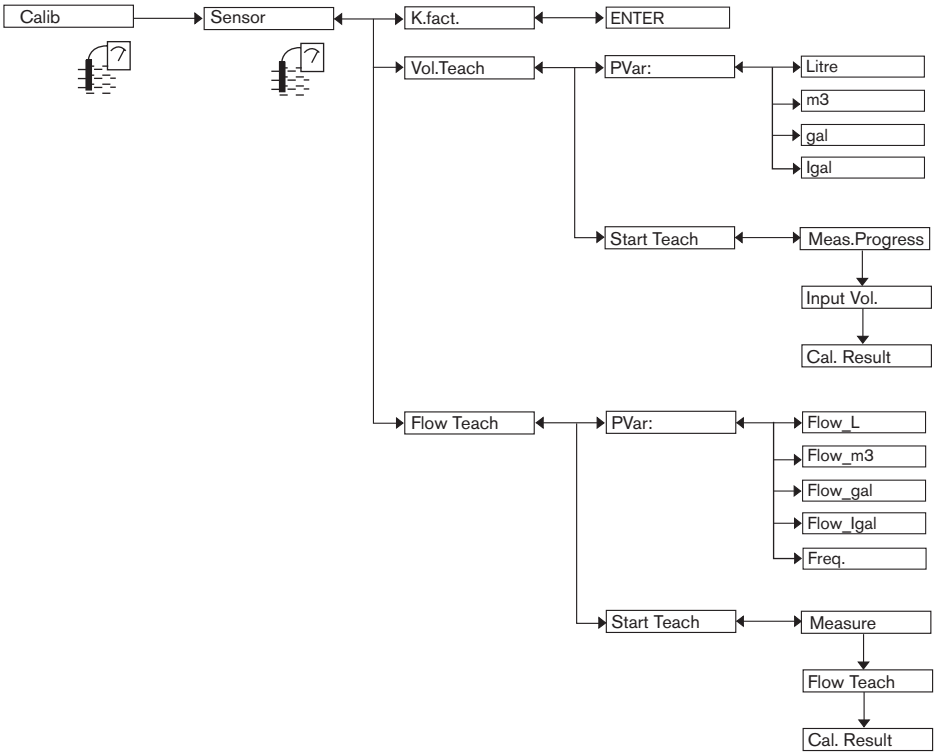

K.FACT.: Enter the K-factor of the fitting used.

VOL.TEACH: Determine the fitting K-factor using a Teach-In procedure depending on a volume.

MAN 1000182212 EN Version: D Status: RL (released | freigegeben) printed: 08.09.2021

Detailed procedure of a Teach-In by volume ("Vol.Teach" function in the "Sensor" menu)

→ Prepare a tank capable of containing 100 litres, for example.

→ Choose the volume unit for the Teach-In:

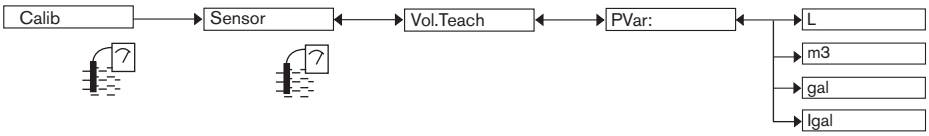

→ Run the Teach-In:

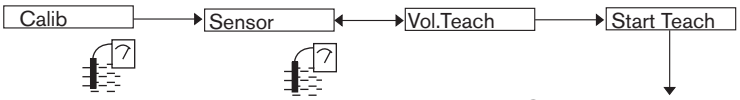

→ Open the valve to fill the tank.

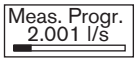

The device displays the instantaneous flow of the fluid.

→ When the tank is filled, close the valve.

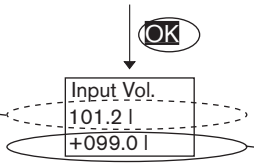

The device displays the volume calculated with the current K-factor. If the display shows "++++", the volume calculated > 9999 volume units: continue the procedure as normal.

→ Enter the actual volume of fluid in the tank.

The device displays the K-factor calculated by Teach-In.

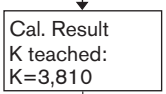

→ Save the new K-factor calculated or not.

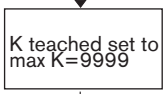

If the calculated K-factor is ≥ 9999, it is forced to 9999.

→ Confirm the K-factor =9999 with "YES" or keep the current K-factor with "NO".

MAN 1000182212 EN Version: D Status: RL (released | freigegeben) printed: 08.09.2021

FLOW TEACH: Determine the fitting K-factor using a Teach-In procedure depending on the flow rate.

Detailed procedure of a Teach-In by flow rate ("Flow.Teach" function in the "Sensor" menu)

→ Choose the volume unit for the Teach-In:

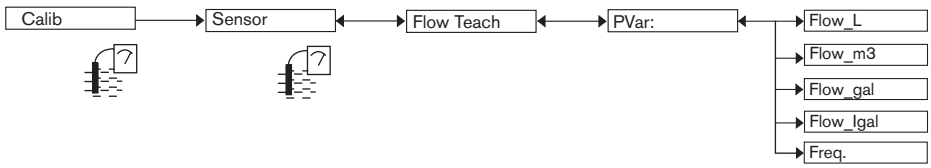

→ Run the Teach-In:

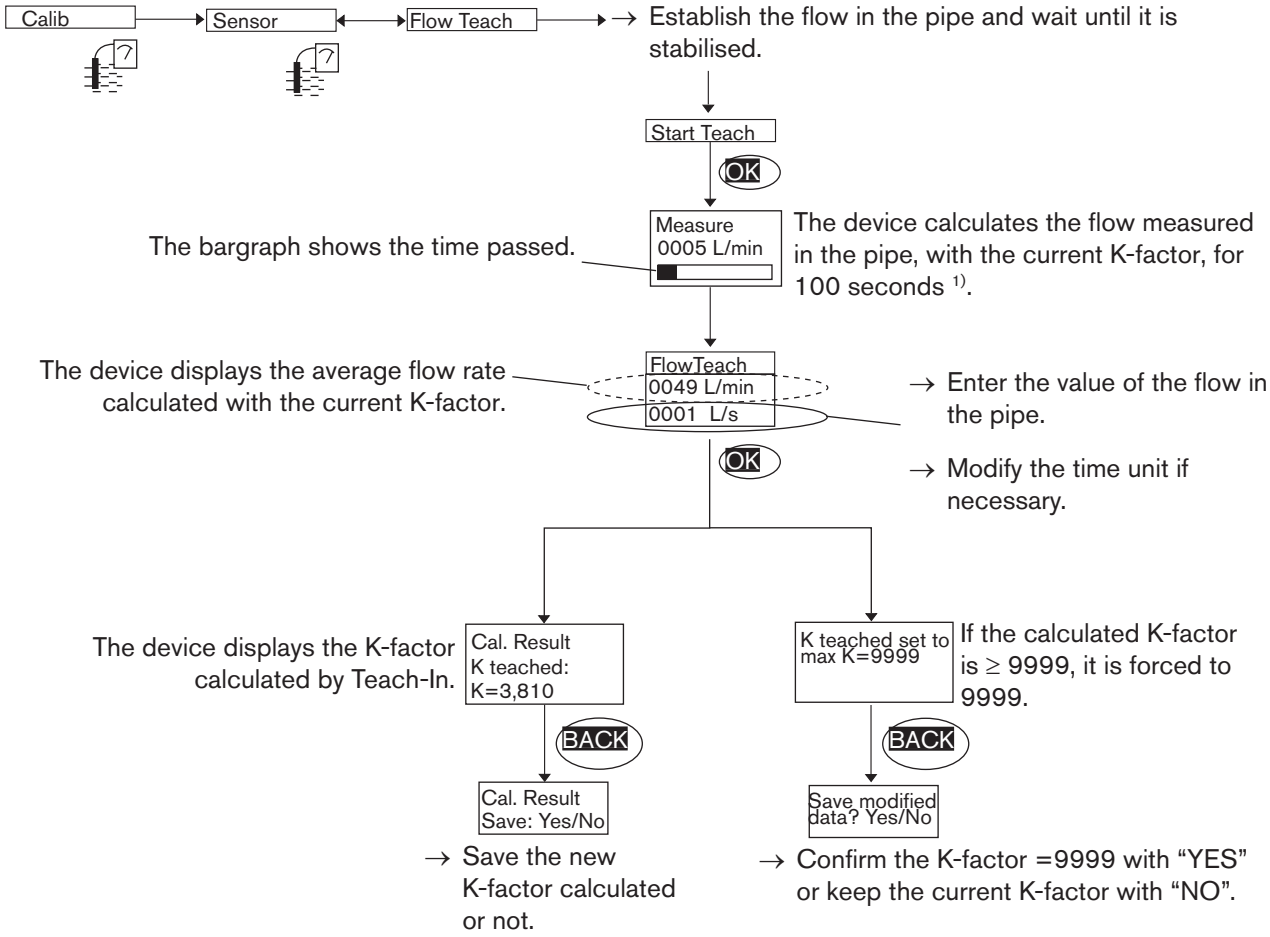

[1] Measurement can be suspended at any time by selecting "OK".

MAN 1000182212 EN Version: D Status: RL (released | freigegeben) printed: 08.09.2021

9.13 Knowing the menu Diagnostic

9.13.1 Modifying the Diagnostic menu access code

See chpt. 9.9 to access the Diagnostic menu.

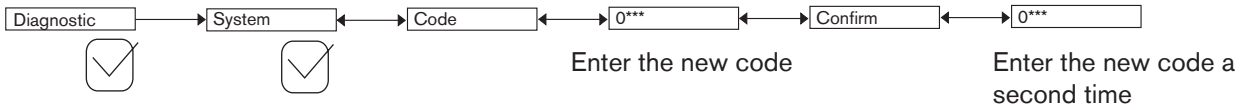

If the default code (0000) is entered, the code will not be requested to access the menu.

9.13.2 Monitoring the sensor input frequency

See chpt. 9.9 to access the Diagnostic menu.

A malfunction in your process or the sensor may be revealed by an out-of-range input frequency.

The function allows for monitoring the sensor input frequency and configure the behaviour of the device if the parametered ranges are exceeded.

The sensor input frequency f is used to determine the flow Q in the pipes using the formula f = KQ (the K-factor being expressed in pulses/s and the flow rate Q in l/s).

To be warned when the input frequency is out of range:

→ activate monitoring of the sensor input frequency in the function "activate", then

→ enter an input frequency range outside of which the device generates a “warning” event and displays the icons ☹ and ⚠.

→ enter an input frequency range outside of which the device generates an “error” event and displays the icons ☹ and ERR.

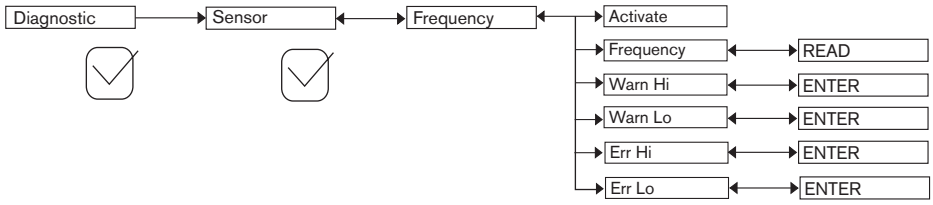

ACTIVATE: choose whether or not to activate monitoring of the sensor input frequency.

This monitoring is done by the generation of a “warning” event if the input frequency range defined in the “Warn hi/lo” functions below is exceeded and an “error” event if the input frequency range defined in the “Err hi/lo” functions below is exceeded.

FREQUENCY: read the sensor input frequency

WARN HI: enter the input frequency value above which a "warning" event is generated.

WARN LO: enter the input frequency value below which a "warning" event is generated.

ERR HI: enter the input frequency value above which an "error" event is generated.

ERR LO: enter the input frequency value below which an "error" event is generated.

MAN 1000182212 EN Version: D Status: RL (released | freigegeben) printed: 08.09.2021

When the device generates a "warning" or "error" event:

→ go into the "Info" menu to read the cause of the event generation.

→ and/or go into the "Sensor" function of the menu "Diagnostic" to read the measured input frequency.

→ if necessary, clean the paddle or the oval gears.

→ if necessary, check the process.

- The "warning" event may also be associated with one or both transistor outputs. Refer to chpt. 9.11.9, function "Output.TR1" or "Output.TR2".
- The "error" event may also be associated with one or both current outputs. Refer to chpt. 9.11.10, function "Output.AC1" or "Output.AC2").
- See also chpt. "10.3 Solving problems".

9.14 Knowing the menu Test

9.14.1 Modifying the Test menu access code

See chpt. 9.9 to access the Test menu.

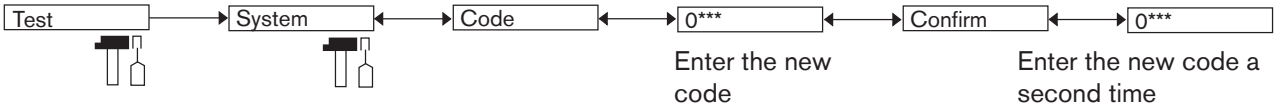

If the default code (0000) is entered, the code will not be requested to access the menu.

9.14.2 Checking the output functions

See chpt. 9.9 to access the Test menu.

- Make sure that the mode "Hold" is deactivated. Refer to chpt. 9.12.1.
- The T icon is displayed in place of the icon as soon as the check for the correct working of an output has started. During the check the related output does not react according to the measured physical value.

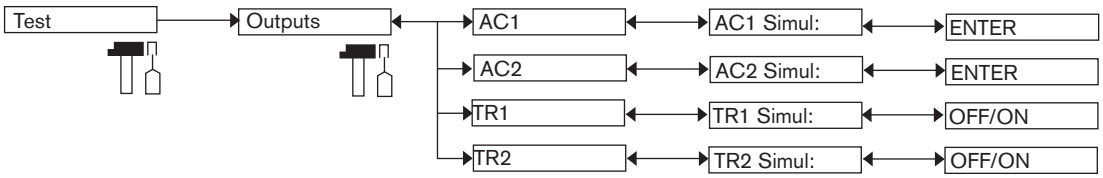

AC1: check that current output 1 is working correctly by entering a current value in mA and then selecting "OK".

AC2: check that current output 2 is working correctly by entering a current value in mA and then selecting "OK".

TR1: check that transistor output 1 is working correctly by selecting the status of the transistor ("ON" or "OFF") then "OK".

TR2: check that transistor output 2 is working correctly by selecting the status of the transistor ("ON" or "OFF") then "OK".

MAN 1000182212 EN Version: D Status: RL (released | freigegeben) printed: 08.09.2021

9.14.3 Checking the outputs behaviour

See chpt. 9.9 to access the Test menu.

The feature allows to simulate the measurement of the physical parameter or the value of the totalizer to check if the outputs are correctly configured.

Make sure that the mode "Hold" is deactivated. Refer to chpt. 9.12.1.

The T icon is displayed in place of the icon as soon as the check for the correct working of an output has started. During the check the related output does not react according to the measured physical value.

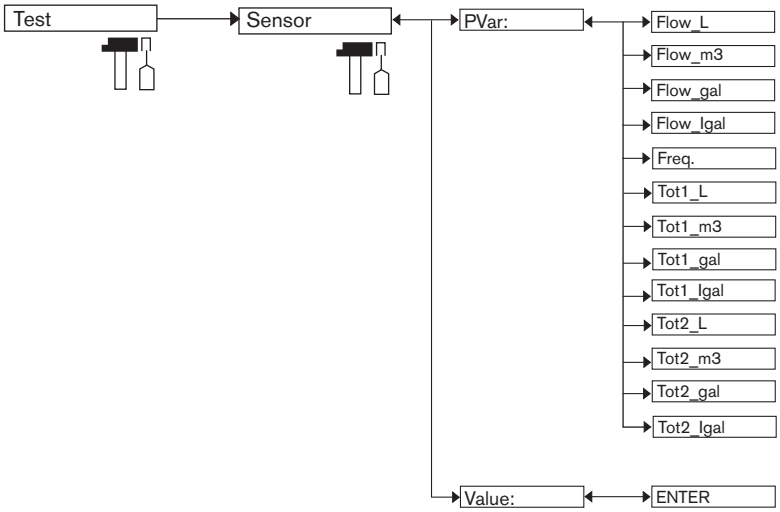

PVAR: choose the physical parameter or the totalizer to be tested.

VALUE: enter a physical parameter value by modifying the flow time unit or a totalizer value, depending on the choice made in the “PVAR” function above, to check output behaviour.

MAN 1000182212 EN Version: D Status: RL (released | freigegeben) printed: 08.09.2021

9.15 Knowing the menu Information

See chpt. 9.9 to access the Information menu.

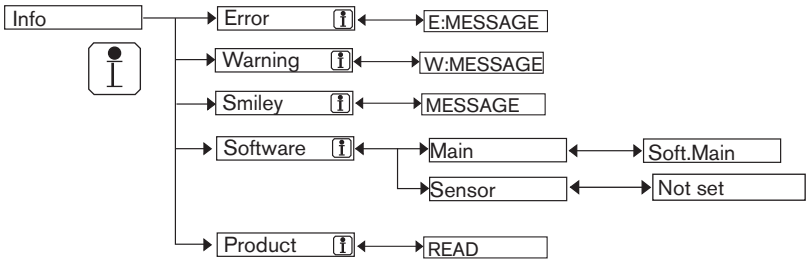

This menu allows to read:

- a short description of the cause that generated an event related to the following icons, when they are displayed by the device:
  - ERROR: ERR
  - WARNING: ⚠
  - SMILEY: ☺ or ☹

See also chpt. "10.3 Solving problems".

- the software version (function “SOFTWARE”) of the acquisition/conversion board for the physical parameters measured.
- the type, serial number and article number of the device.

MAN 1000182212 EN Version: D Status: RL (released | freigegeben) printed: 08.09.2021

10 MAINTENANCE AND TROUBLESHOOTING

10.1 Safety instructions

Risk of injury due to electrical voltage.

- Before carrying out work on the system or the device, disconnect the electrical power for all the conductors and isolate it.
- If the device is installed either in a wet environment or outdoors, all the electrical voltages must be of max. 35 V DC.
- All equipment connected to the device must be double insulated with respect to the mains according to the standard UL/EN 61010-1.
- Observe all applicable accident protection and safety regulations for electrical equipment.

Risk of injury due to pressure in the installation.

- Before any intervention in the installation, stop the circulation of fluid, cut off the pressure and drain the pipe.
- Before any intervention in the installation, make sure that there is no pressure in the pipe.
- Observe the dependency between the fluid temperature and the fluid pressure.

Risk of burns due to high fluid temperatures.

- Use safety gloves to handle the device.
- Before opening the pipe, stop the circulation of fluid and drain the pipe.
- Before opening the pipe, make sure that the pipe is completely empty.

Risk of injury due to the nature of the fluid.

- Respect the prevailing regulations on accident prevention and safety relating to the use of dangerous fluids.

WARNING

Risk of injury due to non-conforming maintenance.

- Maintenance must only be carried out by qualified and skilled staff with the appropriate tools.
- Ensure that the restart of the installation is controlled after any interventions.

10.2 Cleaning the device

→ Clean the device with a cloth dampened with water or a detergent compatible with the materials the device is made of.

Please feel free to contact your Bürkert supplier for any additional information.

The fouling of the paddle-wheel may result in a drift of the flow rate measurement.

→ Clean the paddle-wheel according to the type of fouling.

MAN 1000182212 EN Version: D Status: RL (released | freigegeben) printed: 08.09.2021

10.3 Solving problems

Red LED	Current output	Transistor output	Icon	Message displayed in the Info menu	Possible cause	Recommended action
ON	22 mA	depending on thresholds	ERR + ☺	"Sensor not found"	The connection to the measurement module is interrupted.	→ Switch the power supply off then on again. → If the error persists, return the device to Bürkert.
ON	22 mA	depending on thresholds	ERR + ☺	"TR EE Fact Read" "TR EE User Read"	Parameter reading error.	→ Switch the power supply off then on again. → If the error persists, set the device back to the default settings (chpt. 9.11.3). → If the error persists, return the device to Bürkert.
ON	22 mA	depending on thresholds	ERR + ☺	"TR EE UserWrite"	Parameter saving error.	→ Switch the power supply off then on again. → Save the settings again. → If the error persists, set the device back to the default settings (chpt. 9.11.3). → If the error persists, return the device to Bürkert.
ON	22 mA [1)]	depending on thresholds	ERR + ☹	"E:Frequency"	The input frequency is out of range. This message is displayed if monitoring of the input frequency is activated, depending on the set thresholds ERR LO and ERR HI. Refer to chpt. 9.13.2.	→ Go into the “Sensor” function in the Diagnostic menu to read the value of the input frequency. → check that the paddle is clean and that it rotates freely on its axis or → check that the oval gears rotate freely. → check the installation.

MAN 1000182212 EN Version: D Status: RL (released | freigegeben) printed: 08.09.2021

Red LED	Current output	Transistor output	Icon	Message displayed in the Info menu	Possible cause	Recommended action
OFF	4...20 mA	Switched [2]	⚠ + ☹	"W:Frequency"	The input frequency is out of range. This message is displayed if monitoring of the input frequency is activated, depending on the settings of the thresholds WARN LO and WARN HI. Refer to chpt. 9.13.2.	→ Go into the “Sensor” function in the Diagnostic menu to read the value of the input frequency. → check that the paddle is clean and that it rotates freely on its axis or → check that the oval gears rotate freely. → check the installation.
OFF	4...20 mA	Switched [2]	⚠	"W:TRnPu too big"	In “Pulse” mode, the volume entered for a pulse is incorrect. Refer to chpt. 9.11.10.	→ Enter an appropriate volume. → check the K-factor.
OFF	4...20 mA	Switched [2]	⚠	"W:TRnPu 1:1 set"	In “Pulse” mode, the volume entered for a pulse is incorrect. Refer to chpt. 9.11.10.	→ Enter an appropriate volume. → check the K-factor.
OFF	4...20 mA	depending on thresholds	⚠	"W:to low supply"	The operating supply of the device is too low. If a power shut down occurs, the saving of the totalizers is not guaranteed.	→ check the electrical wiring. → check that the electrical specifications are inside the allowed range. Refer to chpt. 6.7.

[1] if the MODE DIAG function of the "Output.AC1" or "Output.AC2" menu is set to "22 mA". Refer to chpt. 9.11.9; else, the current output delivers a standard current between 4 and 20 mA

[2] If the "PVAR" function of the "Output.TR1" and/or "Output.TR2" menus is set to "warning". Refer to chpt. 9.11.10; else, the transistor outputs are operating depending on the set thresholds.

MAN 1000182212 EN Version: D Status: RL (released | freigegeben) printed: 08.09.2021

11 SPARE PARTS AND ACCESSORIES

CAUTION

Risk of injury and/or damage caused by the use of unsuitable parts.

Incorrect accessories may cause injuries and damage the device and the surrounding area.

- Use only original accessories and original replacement parts from Bürkert.

Spare part (only for Type 8026 flowmeter)	Article number
Set with 1 green FKM seal + 1 black EPDM seal	552111
Snap ring	619205
Nut	619204

Accessory	Article number
Display module	559168
Set with 2 opaque housing-lids, with seals: - 1 screw housing-lid with 1 EPDM seal - 1 quarter turn closing housing-lid with 1 silicone seal	560948
Set with 2 transparent housing-lids, with seals: - 1 screw housing-lid with 1 EPDM seal - 1 quarter turn closing housing-lid with 1 silicone seal	561843
5-pin female M12 connector, moulded on shielded cable (2 m)	438680
5-pin male M12 connector, to be wired	560946
5-pin male M12 connector, moulded on shielded cable (2 m)	559177

12 PACKAGING, TRANSPORT

NOTICE

Damage due to transport

Transport may damage an insufficiently protected device.

- Transport the device in shock-resistant packaging and away from humidity and dirt.
- Do not expose the device to temperatures that may exceed the admissible storage temperature range.
- Protect the electrical interfaces using protective plugs.

MAN 1000182212 EN Version: D Status: RL (released | freigegeben) printed: 08.09.2021

13 STORAGE

NOTICE

Poor storage can damage the device.

- Store the device in a dry place away from dust.
- Storage temperature for Type 8026: −10...+60 °C.
- Storage temperature for Type SE36: −10...+60 °C.
- Storage temperature for the fitting: refer to the related Operating Instructions.

14 DISPOSAL OF THE PRODUCT

→ Dispose of the device and its packaging in an environmentally-friendly way.

NOTICE

Damage to the environment caused by parts contaminated by fluids.

- Comply with the national and/or local regulations which concern the area of waste disposal.

MAN 1000182212 EN Version: D Status: RL (released | freigegeben) printed: 08.09.2021

По вопросам продаж и поддержки обращайтесь:

Архангельск +7 (8182) 45-71-35
Астрахань +7 (8512) 99-46-80
Барнаул +7 (3852) 37-96-76
Белгород +7 (4722) 20-58-80
Брянск +7 (4832) 32-17-25
Владивосток +7 (4232) 49-26-85
Владимир +7 (4922) 49-51-33
Волгоград +7 (8442) 45-94-42
Воронеж +7 (4732) 12-26-70
Екатеринбург +7 (343) 302-14-75
Иваново +7 (4932) 70-02-95
Ижевск +7 (3412) 20-90-75
Иркутск +7 (3952) 56-24-09
Йошкар-Ола +7 (8362) 38-66-61
Казань +7 (843) 207-19-05
Калининград +7 (4012) 72-21-36
Калуга +7 (4842) 33-35-03
Кемерово +7 (3842) 21-56-70
Киров +7 (8332) 20-58-70
Краснодар +7 (861) 238-86-59
Красноярск +7 (391) 989-82-67
Курск +7 (4712) 23-80-45
Липецк +7 (4742) 20-01-75
Магнитогорск +7 (3519) 51-02-81
Москва +7 (499) 404-24-72
Мурманск +7 (8152) 65-52-70
Наб.Челны +7 (8552) 91-01-32
Ниж.Новгород +7 (831) 200-34-65
Нижневартовск +7 (3466) 48-22-23
Нижнекамск +7 (8555) 24-47-85
Новороссийск +7 (8617) 30-82-64
Новосибирск +7 (383) 235-95-48
Омск +7 (381) 299-16-70
Орел +7 (4862) 22-23-86
Оренбург +7 (3532) 48-64-35
Пенза +7 (8412) 23-52-98
Первоуральск +7 (3439) 26-01-18
Пермь +7 (342) 233-81-65
Ростов-на-Дону +7 (863) 309-14-65
Рязань +7 (4912) 77-61-95
Самара +7 (846) 219-28-25
Санкт-Петербург +7 (812) 660-57-09
Саранск +7 (8342) 22-95-16
Саратов +7 (845) 239-86-35
Смоленск +7 (4812) 51-55-32
Сочи +7 (862) 279-22-65
Ставрополь +7 (8652) 57-76-63
Сургут +7 (3462) 77-96-35
Сызрань +7 (8464) 33-50-64
Сыктывкар +7 (8212) 28-83-02
Тверь +7 (4822) 39-50-56
Томск +7 (3822) 48-95-05
Тула +7 (4872) 44-05-30
Тюмень +7 (3452) 56-94-75
Ульяновск +7 (8422) 42-51-95
Уфа +7 (347) 258-82-65
Хабаровск +7 (421) 292-95-69
Чебоксары +7 (8352) 28-50-89
Челябинск +7 (351) 277-89-65
Череповец +7 (8202) 49-07-18
Ярославль +7 (4852) 67-02-35

сайт: burkert.pro-solution.ru | эл. почта: btk@pro-solution.ru
телефон: 8 800 511 88 70

MAN 1000182212 EN Version: D Status: RL (released | freigegeben) printed: 08.09.2021