bürkert
FLUID CONTROL SYSTEMS

Robolux Multiway Multiport Diaphragm Valve, standard product range

- Increased process efficiency
- Reduced installation costs
- Reduced number of valves and welds
- Zero dead volume and no contamination
- Approvals 3.1, FDA, CE, USP VI, ATEX

Type 2036 can be combined with...

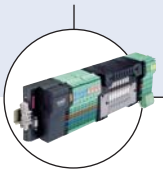

Type 8640 / 8644
Valve block

Type 8055
Full bore magflowmeter

Type 2103
Diaphragm valve

Type 8685
Position feedback head

Type 8686
Control head

This Multiway-Multiport Diaphragm Valve system is designed for control of ultra pure, sterile, aseptic and steam/CIP fluid paths.

It enables optimal sampling, draining or diverting of critical process fluids.

The valve range is based on the patented Robolux technology, where two seats are placed under one diaphragm. This design eliminates dead legs and will minimize the flow system volume.

The valve body is machined from a single piece of bar stock stainless steel. The high quality diaphragms are available in several different USP VI approved materials. The valve is operated with compressed air.

All valves will be delivered with 3.1 certificate, installation drawing and manual instruction. Delivery without diaphragm certificate.

Technical data	
Valve sizes	1/4" to 2", DN 4 - 50
Materials	
Valve body	▪ 1.4435 stainless steel (316L)
Diaphragm	▪ EPDM, advanced PTFE-lined EPDM
Actuator	▪ 1.4308 stainless steel (CF8)
End connections	
Weld end	▪ DIN EN ISO 1127 / ISO 4200 / DIN 11866 series B ▪ DIN 11850 Reihe 2 / DIN 11866 series A ▪ ASME BPE / DIN 11866 series C
Clamp	▪ DIN 32676 Series A (DIN Tube) ▪ DIN 32676 Series B (ISO Tube) ▪ ASME BPE
Surface qualities	
internal	Ra ≤ 0.6 µm passivated
external	~Ra < 1,6 (not polished)
optional	electropolished
Medium pressure	max. 8 bar[1] (depending on actuator and diaphragm)
Pilot pressure	6-10 bar for RV50/70 6-7 bar for RV110
Pilot air ports	Thread G 1/8"
Temperature	
EPDM diaphragm	+5 to max 130°C (max +143° for 60 min)
advanced PTFE coated diaphragm	+5 to 90°C (no steam sterilization)
Environment	0 to max. 60°C

[1] Pressure data [bar]: Overpressure with respect to atmospheric pressure

По вопросам продаж и поддержки обращайтесь:

Архангельск +7 (8182) 45-71-35
Астана +7 (7172) 69-68-15
Астрахань +7 (8512) 99-46-80
Барнаул +7 (3852) 37-96-76
Белгород +7 (4722) 20-58-80
Брянск +7 (4832) 32-17-25
Владивосток +7 (4232) 49-26-85
Владимир +7 (4922) 49-51-33
Волгоград +7 (8442) 45-94-42
Воронеж +7 (4732) 12-26-70
Екатеринбург +7 (343) 302-14-75
Иваново +7 (4932) 70-02-95
Ижевск +7 (3412) 20-90-75
Иркутск +7 (3952) 56-24-09
Йошкар-Ола +7 (8362) 38-66-61
Казань +7 (843) 207-19-05
Калининград +7 (4012) 72-21-36
Калуга +7 (4842) 33-35-03
Кемерово +7 (3842) 21-56-70
Киров +7 (8332) 20-58-70
Краснодар +7 (861) 238-86-59
Красноярск +7 (391) 989-82-67
Курск +7 (4712) 23-80-45
Липецк +7 (4742) 20-01-75
Магнитогорск +7 (3519) 51-02-81
Москва +7 (499) 404-24-72
Мурманск +7 (8152) 65-52-70
Наб.Челны +7 (8552) 91-01-32
Ниж.Новгород +7 (831) 200-34-65
Нижневартовск +7 (3466) 48-22-23
Нижнекамск +7 (8555) 24-47-85
Новороссийск +7 (8617) 30-82-64
Новосибирск +7 (383) 235-95-48
Омск +7 (381) 299-16-70
Орел +7 (4862) 22-23-86
Оренбург +7 (3532) 48-64-35
Пенза +7 (8412) 23-52-98
Первоуральск +7 (3439) 26-01-18
Пермь +7 (342) 233-81-65
Ростов-на-Дону +7 (863) 309-14-65
Рязань +7 (4912) 77-61-95
Самара +7 (846) 219-28-25
Санкт-Петербург +7 (812) 660-57-09
Саранск +7 (8342) 22-95-16
Саратов +7 (845) 239-86-35
Смоленск +7 (4812) 51-55-32
Сочи +7 (862) 279-22-65
Ставрополь +7 (8652) 57-76-63
Сургут +7 (3462) 77-96-35
Сызрань +7 (8464) 33-50-64
Сыктывкар +7 (8212) 28-83-02
Тверь +7 (4822) 39-50-56
Томск +7 (3822) 48-95-05
Тула +7 (4872) 44-05-30
Тюмень +7 (3452) 56-94-75
Ульяновск +7 (8422) 42-51-95
Уфа +7 (347) 258-82-65
Хабаровск +7 (421) 292-95-69
Чебоксары +7 (8352) 28-50-89
Челябинск +7 (351) 277-89-65
Череповец +7 (8202) 49-07-18
Ярославль +7 (4852) 67-02-35

сайт: burkert.pro-solution.ru | эл. почта: btk@pro-solution.ru
телефон: 8 800 511 88 70

Technical data (continued)

Approval

Certificates are delivered together with the valves.

- Valve bodies: EN ISO 10204 3.1
- ATEX Certification: PTB 13 ATEX D103 X
  II 2G c IIC T4
  II 2D c T135°C
- Diaphragms: FDA CFR 177.2600; FDA CFR 177.1550
  USP VI (121°C; EPDM)
  USP VI (advanced PTFE/EPDM)

Medium pressure

Actuator size	Actuator version (for detail see last page)	Pilot pressure [bar]	Seat leakage / Medium pressure [bar]	
			EPDM and other Elastomer max Operating pressure [bar]	Advanced PTFE/EPDM max. operating pressure [bar]
RV50	D11	6-10	7.5	7.5
	D55 (reduce spring)	4-10	5	3.5
RV70	D11	6-10	8	8
	D55 (reduce spring)	4-10	5.5	6
RV110	D11	6-7	7	7.5
	D55 (reduce spring)	4-7	5	5

Valve symbols and flow patterns

Valve symbols and flow patterns - 3C2S / 4C2S

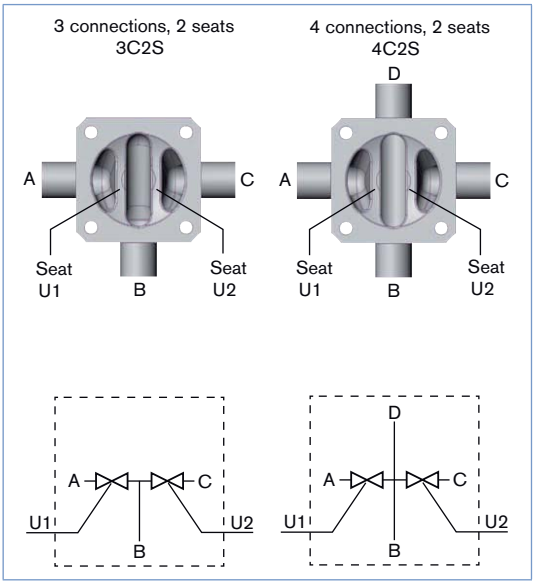

Valve symbols and flow patterns - 4C4S CF

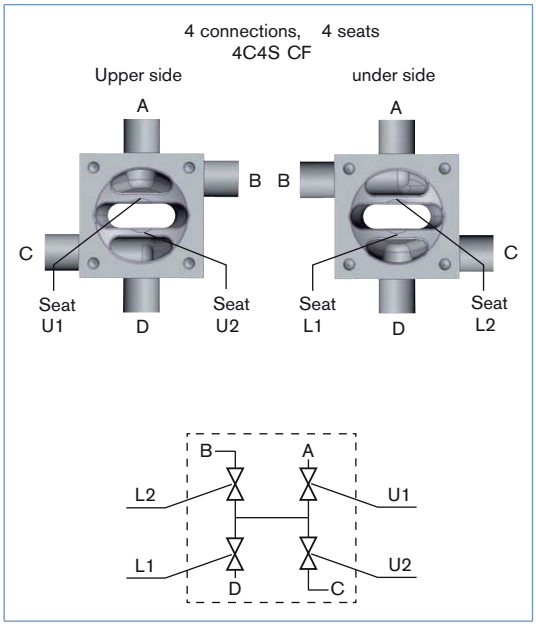

Valve symbols and flow patterns - 4C4S DFP

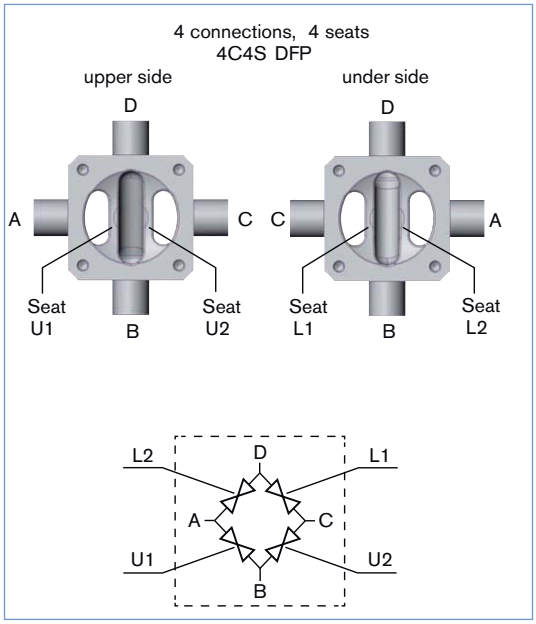

Draining operation of the valve

The draining is achieved differently depending on the valve type. It is very important to fully understand the flow paths of each individual valve body before deciding which port/connection (marked with A, B, C or D) to select for draining. Consult with your Bürkert contact person if there are any questions. The examples below show how to get the optimum draining for the 3C2S/4C2S and 4C4S

Self-draining 3C2S / 4C2S

Installation position for self-draining:

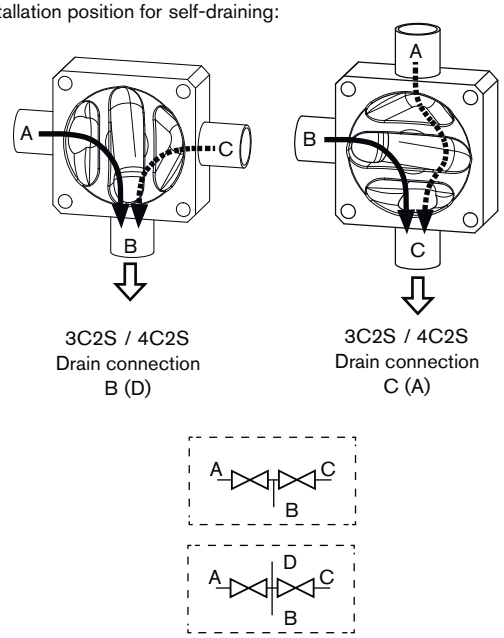

Self-draining - 4C4S DFP

Installation position for self-draining:

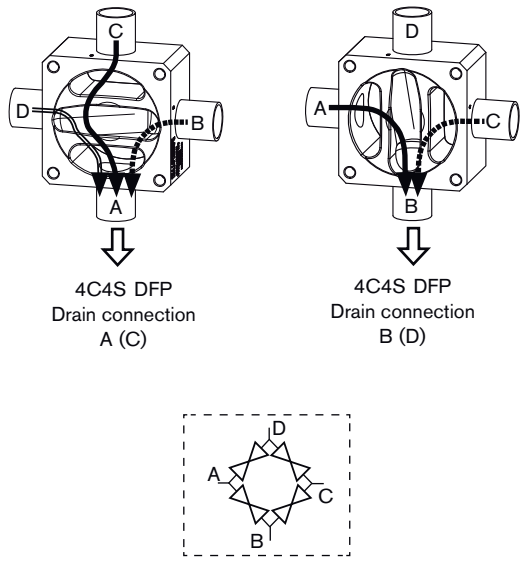

Self-draining 4C4S CF

Installation position for self-draining:

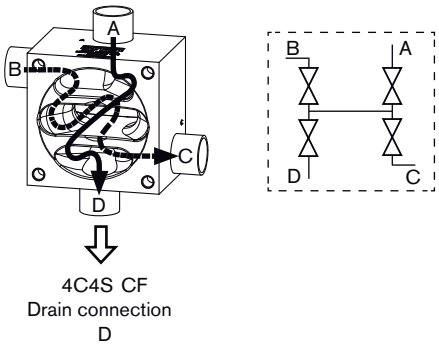

Dimensions [mm]

3Connections 2Seats: 3C2S and 4Connections 2Seats: 4C2S

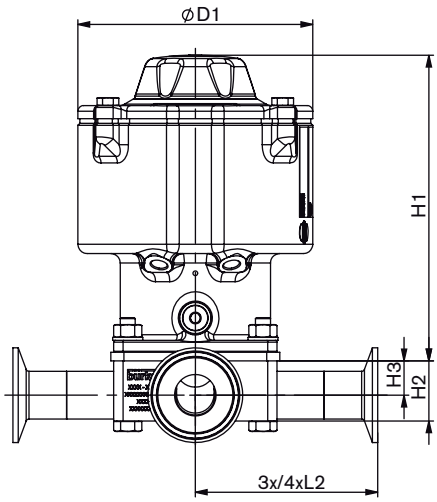

Clamp

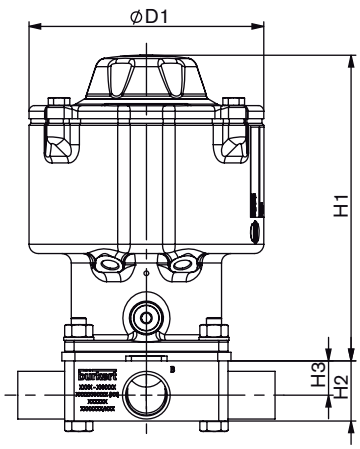

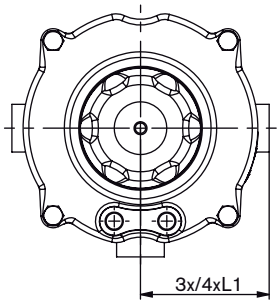

DN [mm]	DN [Zoll]	Actuator size	øD1	H1	H2	H3	Weld end D x s	Weld end L1	Clamp DCl x di	Clamp L2
							DIN EN ISO 1127 / ISO 4200 / DIN 11866 Series B		DIN 32676 Series B (ISO Tube)	
6	-	RV50	83	126.5	16	9.9	10.2 x 1.6	52.5	-	-
8	-	RV50	83	126.5	16	8.3	13.5 x 1.6	52.5	25.0 x 10.3	81.1
10	-	RV50	83	126.5	21	11.4	17.2 x 1.6	52.5	25.0 x 14.0	81.1
15	-	RV50	83	126.5	26	14.4	21.3 x 1.6	52.5	50.5 x 18.1	81.1
20	-	RV70	125	162.5	32	17.6	26.9 x 1.6	68.5	50.5 x 23.7	97.1
25	-	RV110	171	193	38	20.2	33.7 x 2.0	90	50.5 x 29.7	118.6
32	-	RV110	171	193	56	33.8	42.4 x 2.0	90	64.0 x 38.4	118.6
40	-	RV110	171	193	56	30.9	48.3 x 2.0	90	64.0 x 44.3	118.6
50	-	RV110	171	193	62 (3C2S) 68 (4C2S)	30.9 (3C2S) 36.9 (4C2S)	60.3 x 2.0	90	77.5 x 56.3	118.6
							DIN 11850 Series 2 / DIN 11866 Series A		DIN 32676 Series A (DIN Tube)	
4	-	RV50	83	126.5	16	12	6.0 x 1.0	52.5	-	-
6	-	RV50	83	126.5	16	11	8.0 x 1.0	52.5	-	-
8	-	RV50	83	126.5	16	10	10.0 x 1.0	52.5	-	-
10	-	RV50	83	126.5	16	8.5	13.0 x 1.5	52.5	34.0 x 10.0	70.5
15	-	RV50	83	126.5	21	10.5	19.0 x 1.5	52.5	34.0 x 16.0	70.5
20	-	RV70	125	162.5	26	13.5	23.0 x 1.5	68.5	34.0 x 20.0	86.5
25	-	RV70	125	162.5	32	16.5	29.0 x 1.5	68.5	50.5 x 26.0	90
32	-	RV110	171	193	38	19.5	35.0 x 1.5	90	50.5 x 32.0	111.5
40	-	RV110	171	193	44	22.5	41.0 x 1.5	90	50.5 x 38.0	111.5
50	-	RV110	171	193	62	34.5	53.0 x 1.5	90	64.0 x 50.0	111.5
							ASME BPE / DIN 11866 Series C		ASME BPE	
8	1/4"	RV50	83	126.5	16	11.8	6.35 x 0.89	52.5	25.0 x 4.57	81.1
10	3/8"	RV50	83	126.5	16	10.2	9.53 x 0.89	52.5	25.0 x 7.75	81.1
15	1/2"	RV50	83	126.5	16	8.7	12.7 x 1.65	52.5	25.0 x 9.4	81.1
20	3/4"	RV50	83	126.5	21	10.5	19.05 x 1.65	52.5	25.0 x 15.75	81.1
25	1"	RV70	125	162.5	32	18.3	25.4 x 1.65	68.5	50.5 x 22.1	97.1
40	1 1/2"	RV110	171	193	44	24	38.1 x 1.65	90	50.5 x 34.8	118.6
50	2"	RV110	171	193	56	29.6	50.8 x 1.65	90	64.0 x 47.5	118.6

Dimensions [mm]

4Connections 4Seats DFP: 4C4S DFP

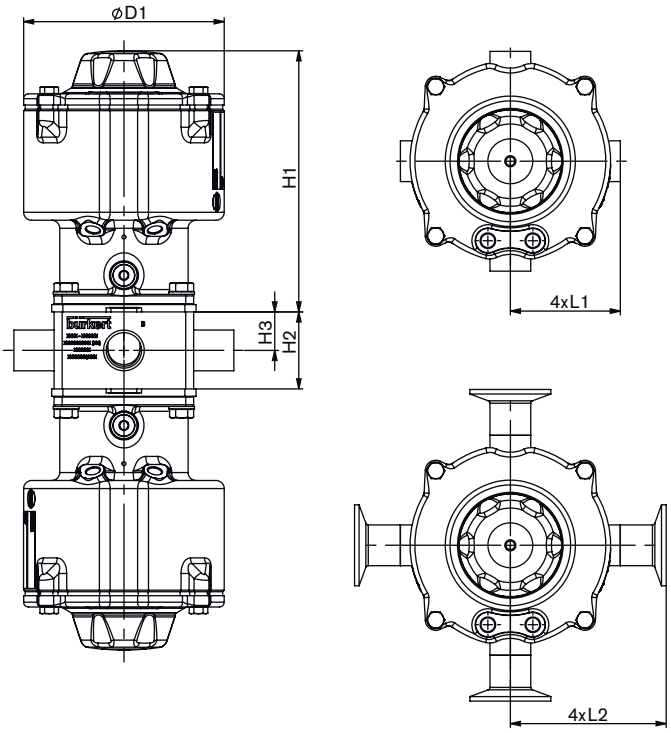

DN [mm]	DN [Zoll]	Actuator size	øD1	H1	H2	H3	Weld end D x s	L1	Clamp DCl x di	L2
							DIN EN ISO 1127 / ISO 4200 / DIN 11866 Series B		DIN 32676 Series B (ISO Tube)	
6	-	RV50	83	126.5	28	14	10.2 x 1.6	52.5	-	-
8	-	RV50	83	126.5	28	14	13.5 x 1.6	52.5	25.0 x 10.3	81.1
10	-	RV50	83	126.5	34	17	17.2 x 1.6	52.5	25.0 x 14.0	81.1
15	-	RV50	83	126.5	34	17	21.3 x 1.6	52.5	50.5 x 18.1	81.1
20	-	RV70	125	162.5	48	24	26.9 x 1.6	68.5	50.5 x 23.7	97.1
25	-	RV110	171	193	65	32.5	33.7 x 2.0	90	50.5 x 29.7	118.6
32	-	RV110	171	193	65	32.5	42.4 x 2.0	90	64.0 x 38.4	118.6
40	-	RV110	171	193	70	35	48.3 x 2.0	90	64.0 x 44.3	118.6
50	-	RV110	171	193	70	35	60.3 x 2.0	90	77.5 x 56.3	118.6
							DIN 11850 Series 2 / DIN 11866 Series A		DIN 32676 Series A (DIN Tube)	
4	-	RV50	83	126.5	28	14	6.0 x 1.0	52.5	-	-
6	-	RV50	83	126.5	28	14	8.0 x 1.0	52.5	-	-
8	-	RV50	83	126.5	28	14	10.0 x 1.0	52.5	-	-
10	-	RV50	83	126.5	28	14	13.0 x 1.5	52.5	34.0 x 10.0	70.5
15	-	RV50	83	126.5	34	17	19.0 x 1.5	52.5	34.0 x 16.0	70.5
20	-	RV70	125	162.5	48	24	23.0 x 1.5	68.5	34.0 x 20.0	86.5
25	-	RV70	125	162.5	48	24	29.0 x 1.5	68.5	50.5 x 26.0	90
32	-	RV110	171	193	65	32.5	35.0 x 1.5	90	50.5 x 32.0	111.5
40	-	RV110	171	193	70	35	41.0 x 1.5	90	50.5 x 38.0	111.5
50	-	RV110	171	193	70	35	53.0 x 1.5	90	64.0 x 50.0	111.5
							ASME BPE / DIN 11866 Series C		ASME BPE	
8	1/4"	RV50	83	126.5	28	14	6.35 x 0.89	52.5	25.0 x 4.57	81.1
10	3/8"	RV50	83	126.5	28	14	9.53 x 0.89	52.5	25.0 x 7.75	81.1
15	1/2"	RV50	83	126.5	28	14	12.7 x 1.65	52.5	25.0 x 9.4	81.1
20	3/4"	RV50	83	126.5	34	17	19.05 x 1.65	52.5	25.0 x 15.75	81.1
25	1"	RV70	125	162.5	48	24	25.4 x 1.65	68.5	50.5 x 22.1	97.1
40	1 1/2"	RV110	171	193	70	35	38.1 x 1.65	90	50.5 x 34.8	118.6
50	2"	RV110	171	193	70	35	50.8 x 1.65	90	64.0 x 47.5	118.6

Dimensions [mm]

4Connections 4Seats CF; 4C4S CF

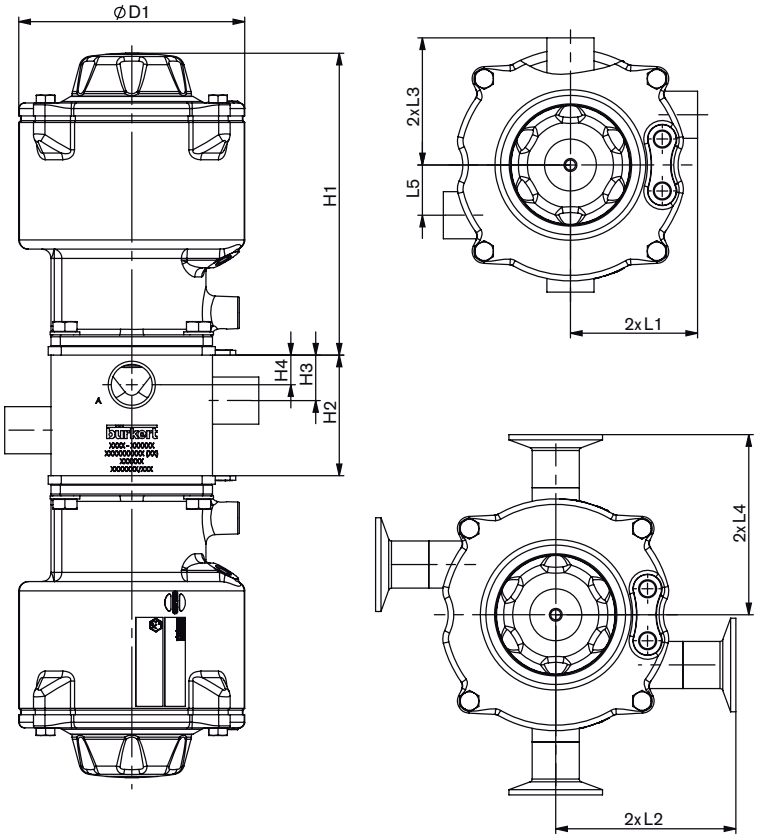

DN [mm]	DN [Zoll]	Actuator size	øD1	H1	H2	H3	H4	L5	Weld end D x s	L1	L3	Clamp DCl x di	L2	L4
									DIN EN ISO 1127 / ISO 4200 / DIN 11866 Series B			DIN32676 series B (ISO Tube)		
6	-	RV50	83	126.5	40	18.5	11.5	20.5	10.2 x 1.6	52.5	52.5	-	-	-
8	-	RV50	83	126.5	42	19	9.9	13.6	13.5 x 1.6	52.5	52.5	25.0 x 10.3	81.1	81.1
10	-	RV50	83	126.5	50	21.5	12	18.2	17.2 x 1.6	52.5	52.5	25.0 x 14.0	81.1	-
15	-	RV50	83	126.5	58	25.5	11.7	12.2	21.3 x 1.6	52.5	52.5	50.5 x 18.1	81.1	81.1
20	-	RV70	125	162.5	67	25.5	15.2	27.8	26.9 x 1.6	68.5	68.5	50.5 x 23.7	97.1	97.1
25	-	RV110	171	193	91	35	24.2	40.1	33.7 x 2.0	90	90	50.5 x 29.7	118.6	118.6
32	-	RV110	171	193	106	42	22.5	44	42.4 x 2.0	90	91.5	64.0 x 38.4	118.6	-
40	-	RV110	171	193	120	46.5	26	47.1	48.3 x 2.0	90	98.2	64.0 x 44.3	118.6	126.8
50	-	RV110	171	193	147	53.5	32	53.1	60.3 x 2.0	90	110.2	77.5 x 56.3	118.6	138.8
									DIN 11850 Series 2 / DIN 11866 Series A			DIN 32676 Series A (DIN Tube)		
4	-	RV50	83	126.5	40	18.5	13	22	6.0 x 1.0	52.5	52.5	-	-	-
6	-	RV50	83	126.5	40	18.5	12	21	8.0 x 1.0	52.5	52.5	-	-	-
8	-	RV50	83	126.5	40	18.5	11	20	10.0 x 1.0	52.5	52.5	-	-	-
10	-	RV50	83	126.5	40	19	9	19	13.0 x 1.5	52.5	52.5	34.0 x 10.0	81.1	81.1
15	-	RV50	83	126.5	54	23.5	11.9	13.3	19.0 x 1.5	52.5	52.5	34.0 x 16.0	81.1	81.1
20	-	RV70	125	162.5	62	22.5	17	26	23.0 x 1.5	68.5	68.5	34.0 x 20.0	86.5	86.5
25	-	RV70	125	162.5	73	27.5	16.5	29	29.0 x 1.5	68.5	69.5	50.5 x 26.0	90	91
32	-	RV110	171	193	95	37	23	41	35.0 x 1.5	90	90	50.5 x 32.0	111.5	111.5
40	-	RV110	171	193	104	41.5	22	33	41.0 x 1.5	90	91	50.5 x 38.0	111.5	112.5
50	-	RV110	171	193	134	50.5	30	50	53.0 x 1.5	90	103.5	64.0 x 50.0	111.5	125
									ASME BPE / DIN 11866 Series C			ASME BPE		
8	1/4"	RV50	83	126.5	40	18.5	12.5	21.7	6.35 x 0.89	52.5	52.5	25.0 x 4.57	81.1	81.1
10	3/8"	RV50	83	126.5	40	18.5	11	20.1	9.53 x 0.89	52.5	52.5	25.0 x 7.75	81.1	81.1
15	1/2"	RV50	83	126.5	40	8.5	10.3	13.2	12.7 x 1.65	52.5	52.5	25.0 x 9.4	81.1	81.1
20	3/4"	RV50	83	126.5	53	22.5	12	13.4	19.05 x 1.65	52.5	52.5	25.0 x 15.75	81.1	81.1
25	1"	RV70	125	162.5	65	24.5	16	27	25.4 x 1.65	68.5	68.5	50.5 x 22.1	97.1	97.1
40	1 1/2"	RV110	171	193	98	39	21.6	42.4	38.1 x 1.65	90	90	50.5 x 34.8	118.6	118.6
50	2"	RV110	171	193	126	48.5	27.7	48.7	50.8 x 1.65	90	101	64.0 x 47.5	118.6	129.6

Ordering information for valve system On/Off Robolux Type 8806

A **valve system On/Off Robolux Type 8806** consists of a **diaphragm valve Type 2036** and a feedback head **Type 8685** or control head **Type 8686**. For the configuration of further valve systems please use the "Request for quotation" on p. 15 go to page
You order two components and receive a complete assembled and certified valve.

Ordering the valve system On/off Robolux type 8806-DI

Click on the orange box "More info." below... you will come to our website for the resp. product where you can download the data sheet.

Position feedback head Type 8685 More info.

The New Feedback, Type 8685, for combination with the pneumatically operated actuator, Type 2036. The Robolux model is specially designed for hygienic environments.

The feedback unit with electrical position feedback is also available in ASI and is intrinsically safe acc. to ATEX

Main customer benefits:
- Adjustment to the individual actuator size is done through DIP switches.
- The devices contain the complete automation functionality of the two individually operated actuator pistons.
- Visual position feedback is done by non-contact switches and high-power LEDs.
- Hygienic design, materials are chemically resistant against cleaning media and a proven electrical IP protection.
- Standard version, 24 VDC.

Control head Type 8686 More info.

The new Control Head, Type 8686, for combinaition with the pneumatically operated actuator, Type 2036. The Robolux model is specially designed for hygienic environments.

The Control Head which combines electrical position feedback and pneumatic control is also available in ASI and is intrinsically safe acc. to ATEX

Main customer benefits:
- Adjustment to the individual actuator size is done through DIP-switches.
- The devices contain the complete automation functionality of both individually operated actuator pistons.
- Visual position feedback is done by noncontact switches and high-power LEDs.
- Integrated compressed air filter to protect the pilot valve function against particles through the compressed air supply.
- Hygienic design, materials beeing chemically resistant against cleaning media and a proven electrical IP protection.
- Standard version, 24 VDC.

Note:
Certain system configurations of size RV50 can not be welded to each other directly. Please contact your local subsidaries in advance before ordering.

Dimensions for valve system On/Off Robolux Type 8806-DI [mm]

Type 8806-DI-S with body type 3C2S or 4C2S and feedback head Type 8685 [mm]

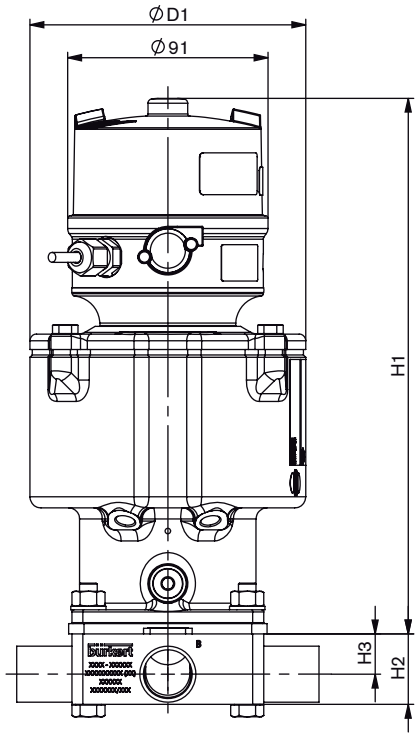

DN [mm]	DN [Zoll]	Actuator size	øD1	H1	H2	H3	Weld end D x s	L1	Clamp DCl x di	L2
							DIN EN ISO 1127 / ISO 4200 / DIN 11866 Series B		DIN 32676 Series B (ISO Tube)	
6	-	RV50	83	214.5	16	9.9	10.2 x 1.6	52.5	-	-
8	-	RV50	83	214.5	16	8.3	13.5 x 1.6	52.5	25.0 x 10.3	81.1
10	-	RV50	83	214.5	21	11.4	17.2 x 1.6	52.5	25.0 x 14.0	81.1
15	-	RV50	83	214.5	26	14.4	21.3 x 1.6	52.5	50.5 x 18.1	81.1
20	-	RV70	125	242.5	32	17.6	26.9 x 1.6	68.5	50.5 x 23.7	97.1
25	-	RV110	171	273	38	20.2	33.7 x 2.0	90	50.5 x 29.7	118.6
32	-	RV110	171	273	56	33.8	42.4 x 2.0	90	64.0 x 38.4	118.6
40	-	RV110	171	273	56	30.9	48.3 x 2.0	90	64.0 x 44.3	118.6
50	-	RV110	171	273	62 (3C2S) 68 (4C2S)	30.9 (3C2S) 36.9 (4C2S)	60.3 x 2.0	90	77.5 x 56.3	118.6
							DIN 11850 Series 2 / DIN 11866 Series A		DIN 32676 Series A (DIN Tube)	
4	-	RV50	83	214.5	16	12	6.0 x 1.0	52.5	-	-
6	-	RV50	83	214.5	16	11	8.0 x 1.0	52.5	-	-
8	-	RV50	83	214.5	16	10	10.0 x 1.0	52.5	-	-
10	-	RV50	83	214.5	16	8.5	13.0 x 1.5	52.5	34.0 x 10.0	70.5
15	-	RV50	83	214.5	21	10.5	19.0 x 1.5	52.5	34.0 x 16.0	70.5
20	-	RV70	125	242.5	26	13.5	23.0 x 1.5	68.5	34.0 x 20.0	86.5
25	-	RV70	125	242.5	32	16.5	29.0 x 1.5	68.5	50.5 x 26.0	90
32	-	RV110	171	273	38	19.5	35.0 x 1.5	90	50.5 x 32.0	111.5
40	-	RV110	171	273	44	22.5	41.0 x 1.5	90	50.5 x 38.0	111.5
50	-	RV110	171	273	62	34.5	53.0 x 1.5	90	64.0 x 50.0	111.5
							ASME BPE / DIN 11866 Series C		ASME BPE	
8	1/4"	RV50	83	214.5	16	11.8	6.35 x 0.89	52.5	25.0 x 4.57	81.1
10	3/8"	RV50	83	214.5	16	10.2	9.53 x 0.89	52.5	25.0 x 7.75	81.1
15	1/2"	RV50	83	214.5	16	8.7	12.7 x 1.65	52.5	25.0 x 9.4	81.1
20	3/4"	RV50	83	214.5	21	10.5	19.05 x 1.65	52.5	25.0 x 15.75	81.1
25	1"	RV70	125	242.5	32	18.3	25.4 x 1.65	68.5	50.5 x 22.1	97.1
40	1 1/2"	RV110	171	273	44	24	38.1 x 1.65	90	50.5 x 34.8	118.6
50	2"	RV110	171	273	56	29.6	50.8 x 1.65	90	64.0 x 47.5	118.6

Dimensions for valve system On/Off Robolux Type 8806-DI [mm]

Type 8806-DI-S with body type 4C4S DFP and feedback head Type 8685 [mm]

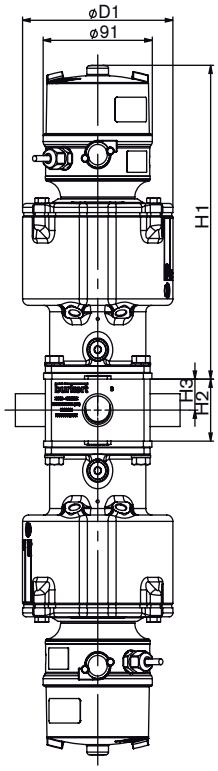

DN [mm]	DN [Zoll]	Actuator size	øD1	H1	H2	H3	Weld end D x s	L1	Clamp DCI x di	L2
							DIN EN ISO 1127 / ISO 4200 / DIN 11866 Series B		DIN 32676 Series B (ISO Tube)	
6	-	RV50	83	214.5	28	14	10.2 x 1.6	52.5	-	-
8	-	RV50	83	214.5	28	14	13.5 x 1.6	52.5	25.0 x 10.3	81.1
10	-	RV50	83	214.5	34	17	17.2 x 1.6	52.5	25.0 x 14.0	81.1
15	-	RV50	83	214.5	34	17	21.3 x 1.6	52.5	50.5 x 18.1	81.1
20	-	RV70	125	242.5	48	24	26.9 x 1.6	68.5	50.5 x 23.7	97.1
25	-	RV110	171	273	65	32.5	33.7 x 2.0	90	50.5 x 29.7	118.6
32	-	RV110	171	273	65	32.5	42.4 x 2.0	90	64.0 x 38.4	118.6
40	-	RV110	171	273	70	35	48.3 x 2.0	90	64.0 x 44.3	118.6
50	-	RV110	171	273	70	35	60.3 x 2.0	90	77.5 x 56.3	118.6
							DIN 11850 Series 2 / DIN 11866 Series A		DIN 32676 Series A (DIN Tube)	
4	-	RV50	83	214.5	28	14	6.0 x 1.0	52.5	-	-
6	-	RV50	83	214.5	28	14	8.0 x 1.0	52.5	-	-
8	-	RV50	83	214.5	28	14	10.0 x 1.0	52.5	-	-
10	-	RV50	83	214.5	28	14	13.0 x 1.5	52.5	34.0 x 10.0	70.5
15	-	RV50	83	214.5	34	17	19.0 x 1.5	52.5	34.0 x 16.0	70.5
20	-	RV70	125	242.5	48	24	23.0 x 1.5	68.5	34.0 x 20.0	86.5
25	-	RV70	125	242.5	48	24	29.0 x 1.5	68.5	50.5 x 26.0	90
32	-	RV110	171	273	65	32.5	35.0 x 1.5	90	50.5 x 32.0	111.5
40	-	RV110	171	273	70	35	41.0 x 1.5	90	50.5 x 38.0	111.5
50	-	RV110	171	273	70	35	53.0 x 1.5	90	64.0 x 50.0	111.5
							ASME BPE / DIN 11866 Series C		ASME BPE	
8	1/4"	RV50	83	214.5	28	14	6.35 x 0.89	52.5	25.0 x 4.57	81.1
10	3/8"	RV50	83	214.5	28	14	9.53 x 0.89	52.5	25.0 x 7.75	81.1
15	1/2"	RV50	83	214.5	28	14	12.7 x 1.65	52.5	25.0 x 9.4	81.1
20	3/4"	RV50	83	214.5	34	17	19.05 x 1.65	52.5	25.0 x 15.75	81.1
25	1"	RV70	125	242.5	48	24	25.4 x 1.65	68.5	50.5 x 22.1	97.1
40	1 1/2"	RV110	171	273.0	70	35	38.1 x 1.65	90	50.5 x 34.8	118.6
50	2"	RV110	171	273.0	70	35	50.8 x 1.65	90	64.0 x 47.5	118.6

Dimensions for valve system On/Off Robolux Type 8806-DI [mm]

Type 8806-DI-S with body type 4C4S CF and feedback head Type 8685 [mm]

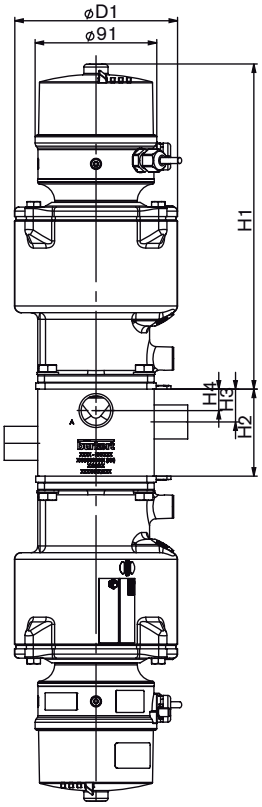

DN [mm]	DN [Zoll]	Actuator size	øD1	H1	H2	H3	H4	L5	Weld end D x s	L1	L3	Clamp DCl x di	L2	L4
									DIN EN ISO 1127 / ISO 4200 / DIN 11866 Series B			DIN 32676 Series B (ISO Tube)		
6	-	RV50	83	214.5	40	18.5	11.5	20.5	10.2 x 1.6	52.5	52.5	-	-	-
8	-	RV50	83	214.5	42	19	9.9	13.6	13.5 x 1.6	52.5	52.5	25.0 x 10.3	81.1	81.1
10	-	RV50	83	214.5	50	21.5	12	18.2	17.2 x 1.6	52.5	52.5	25.0 x 14.0	81.1	-
15	-	RV50	83	214.5	58	25.5	11.7	12.2	21.3 x 1.6	52.5	52.5	50.5 x 18.1	81.1	81.1
20	-	RV70	125	242.5	67	25.5	15.2	27.8	26.9 x 1.6	68.5	68.5	50.5 x 23.7	97.1	97.1
25	-	RV110	171	273	91	35	24.2	40.1	33.7 x 2.0	90	90	50.5 x 29.7	118.6	118.6
32	-	RV110	171	273	106	42	22.5	44	42.4 x 2.0	90	91.5	64.0 x 38.4	118.6	-
40	-	RV110	171	273	120	46.5	26	47.1	48.3 x 2.0	90	98.2	64.0 x 44.3	118.6	126.8
50	-	RV110	171	273	147	53.5	32	53.1	60.3 x 2.0	90	110.2	77.5 x 56.3	118.6	138.8
									DIN 11850 Series 2 / DIN 11866 Series A			DIN 32676 Series A (DIN Tube)		
4	-	RV50	83	214.5	40	18.5	13	22	6.0 x 1.0	52.5	52.5	-	-	-
6	-	RV50	83	214.5	40	18.5	12	21	8.0 x 1.0	52.5	52.5	-	-	-
8	-	RV50	83	214.5	40	18.5	11	20	10.0 x 1.0	52.5	52.5	-	-	-
10	-	RV50	83	214.5	40	19	9	19	13.0 x 1.5	52.5	52.5	34.0 x 10.0	81.1	81.1
15	-	RV50	83	214.5	54	23.5	11.9	13.3	19.0 x 1.5	52.5	52.5	34.0 x 16.0	81.1	81.1
20	-	RV70	125	242.5	62	22.5	17	26	23.0 x 1.5	68.5	68.5	34.0 x 20.0	86.5	86.5
25	-	RV70	125	242.5	73	27.5	16.5	29	29.0 x 1.5	68.5	69.5	50.5 x 26.0	90	91
32	-	RV110	171	273	95	37	23	41	35.0 x 1.5	90	90	50.5 x 32.0	111.5	111.5
40	-	RV110	171	273	104	41.5	22	33	41.0 x 1.5	90	91	50.5 x 38.0	111.5	112.5
50	-	RV110	171	273	134	50.5	30	50	53.0 x 1.5	90	103.5	64.0 x 50.0	111.5	125
									ASME BPE / DIN 11866 Series C			ASME BPE		
8	1/4"	RV50	83	214.5	40	18.5	12.5	21.7	6.35 x 0.89	52.5	52.5	25.0 x 4.57	81.1	81.1
10	3/8"	RV50	83	214.5	40	18.5	11	20.1	9.53 x 0.89	52.5	52.5	25.0 x 7.75	81.1	81.1
15	1/2"	RV50	83	214.5	40	8.5	10.3	13.2	12.7 x 1.65	52.5	52.5	25.0 x 9.4	81.1	81.1
20	3/4"	RV50	83	214.5	53	22.5	12	13.4	19.05 x 1.65	52.5	52.5	25.0 x 15.75	81.1	81.1
25	1"	RV70	125	242.5	65	24.5	16	27	25.4 x 1.65	68.5	68.5	50.5 x 22.1	97.1	97.1
40	1 1/2"	RV110	171	273	98	39	21.6	42.4	38.1 x 1.65	90	90	50.5 x 34.8	118.6	118.6
50	2"	RV110	171	273	126	48.5	27.7	48.7	50.8 x 1.65	90	101	64.0 x 47.5	118.6	129.6

Dimensions for valve system On/Off Robolux Type 8806-DI [mm]

Type 8806-DI-T with body type 3C2S or 4C2S and feedback head Type 8686 [mm]

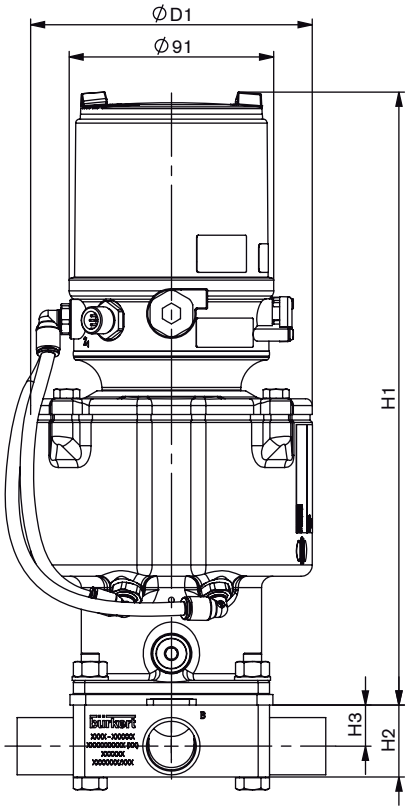

DN [mm]	DN [Zoll]	Actuator size	øD1	H1	H2	H3	Weld end D x s	L1	Clamp DCl x di	L2
							DIN EN ISO 1127 / ISO 4200 / DIN 11866 Series B		DIN 32676 Series B (ISO Tube)	
6	-	RV50	83	243.5	16	9.9	10.2 x 1.6	52.5	-	-
8	-	RV50	83	243.5	16	8.3	13.5 x 1.6	52.5	25.0 x 10.3	81.1
10	-	RV50	83	243.5	21	11.4	17.2 x 1.6	52.5	25.0 x 14.0	81.1
15	-	RV50	83	243.5	26	14.4	21.3 x 1.6	52.5	50.5 x 18.1	81.1
20	-	RV70	125	272	32	17.6	26.9 x 1.6	68.5	50.5 x 23.7	97.1
25	-	RV110	171	302.5	38	20.2	33.7 x 2.0	90	50.5 x 29.7	118.6
32	-	RV110	171	302.5	56	33.8	42.4 x 2.0	90	64.0 x 38.4	118.6
40	-	RV110	171	302.5	56	30.9	48.3 x 2.0	90	64.0 x 44.3	118.6
50	-	RV110	171	302.5	62 (3C2S) 68 (4C2S)	30.9 (3C2S) 36.9 (4C2S)	60.3 x 2.0	90	77.5 x 56.3	118.6
							DIN 11850 Series 2 / DIN 11866 Series A		DIN 32676 Series A (DIN Tube)	
4	-	RV50	83	243.5	16	12	6.0 x 1.0	52.5	-	-
6	-	RV50	83	243.5	16	11	8.0 x 1.0	52.5	-	-
8	-	RV50	83	243.5	16	10	10.0 x 1.0	52.5	-	-
10	-	RV50	83	243.5	16	8.5	13.0 x 1.5	52.5	34.0 x 10.0	70.5
15	-	RV50	83	243.5	21	10.5	19.0 x 1.5	52.5	34.0 x 16.0	70.5
20	-	RV70	125	272	26	13.5	23.0 x 1.5	68.5	34.0 x 20.0	86.5
25	-	RV70	125	272	32	16.5	29.0 x 1.5	68.5	50.5 x 26.0	90
32	-	RV110	171	302.5	38	19.5	35.0 x 1.5	90	50.5 x 32.0	111.5
40	-	RV110	171	302.5	44	22.5	41.0 x 1.5	90	50.5 x 38.0	111.5
50	-	RV110	171	302.5	62	34.5	53.0 x 1.5	90	64.0 x 50.0	111.5
							ASME BPE / DIN 11866 Series C		ASME BPE	
8	1/4"	RV50	83	243.5	16	11.8	6.35 x 0.89	52.5	25.0 x 4.57	81.1
10	3/8"	RV50	83	243.5	16	10.2	9.53 x 0.89	52.5	25.0 x 7.75	81.1
15	1/2"	RV50	83	243.5	16	8.7	12.7 x 1.65	52.5	25.0 x 9.4	81.1
20	3/4"	RV50	83	243.5	21	10.5	19.05 x 1.65	52.5	25.0 x 15.75	81.1
25	1"	RV70	125	272	32	18.3	25.4 x 1.65	68.5	50.5 x 22.1	97.1
40	1 1/2"	RV110	171	302.5	44	24	38.1 x 1.65	90	50.5 x 34.8	118.6
50	2"	RV110	171	302.5	56	29.6	50.8 x 1.65	90	64.0 x 47.5	118.6

Dimensions for valve system On/Off Robolux Type 8806-DI [mm]

Type 8806-DI-T with body type 4C4S DFP and feedback head Type 8686 [mm]

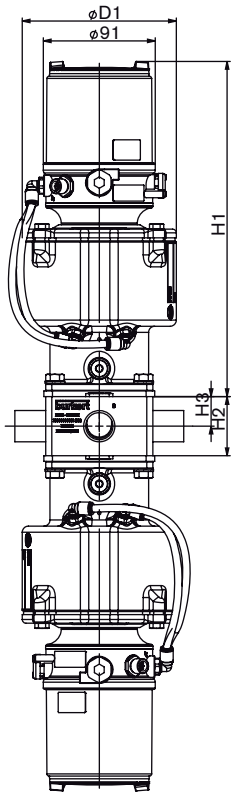

DN [mm]	DN [Zoll]	Actuator size	øD1	H1	H2	H3	Weld end D x s	L1	Clamp DCl x di	L2
							DIN EN ISO 1127 / ISO 4200 / DIN 11866 Series B		DIN 32676 Series B (ISO Tube)	
6	-	RV50	83	243.5	28	14	10.2 x 1.6	52.5	-	-
8	-	RV50	83	243.5	28	14	13.5 x 1.6	52.5	25.0 x 10.3	81.1
10	-	RV50	83	243.5	34	17	17.2 x 1.6	52.5	25.0 x 14.0	81.1
15	-	RV50	83	243.5	34	17	21.3 x 1.6	52.5	50.5 x 18.1	81.1
20	-	RV70	125	272	48	24	26.9 x 1.6	68.5	50.5 x 23.7	97.1
25	-	RV110	171	302.5	65	32.5	33.7 x 2.0	90	50.5 x 29.7	118.6
32	-	RV110	171	302.5	65	32.5	42.4 x 2.0	90	64.0 x 38.4	118.6
40	-	RV110	171	302.5	70	35	48.3 x 2.0	90	64.0 x 44.3	118.6
50	-	RV110	171	302.5	70	35	60.3 x 2.0	90	77.5 x 56.3	118.6
							DIN 11850 Series 2 / DIN 11866 Series A		DIN 32676 Series A (DIN Tube)	
4	-	RV50	83	243.5	28	14	6.0 x 1.0	52.5	-	-
6	-	RV50	83	243.5	28	14	8.0 x 1.0	52.5	-	-
8	-	RV50	83	243.5	28	14	10.0 x 1.0	52.5	-	-
10	-	RV50	83	243.5	28	14	13.0 x 1.5	52.5	34.0 x 10.0	70.5
15	-	RV50	83	243.5	34	17	19.0 x 1.5	52.5	34.0 x 16.0	70.5
20	-	RV70	125	272	48	24	23.0 x 1.5	68.5	34.0 x 20.0	86.5
25	-	RV70	125	272	48	24	29.0 x 1.5	68.5	50.5 x 26.0	90
32	-	RV110	171	302.5	65	32.5	35.0 x 1.5	90	50.5 x 32.0	111.5
40	-	RV110	171	302.5	70	35	41.0 x 1.5	90	50.5 x 38.0	111.5
50	-	RV110	171	302.5	70	35	53.0 x 1.5	90	64.0 x 50.0	111.5
							ASME BPE / DIN 11866 Series C		ASME BPE	
8	1/4"	RV50	83	243.5	28	14	6.35 x 0.89	52.5	25.0 x 4.57	81.1
10	3/8"	RV50	83	243.5	28	14	9.53 x 0.89	52.5	25.0 x 7.75	81.1
15	1/2"	RV50	83	243.5	28	14	12.7 x 1.65	52.5	25.0 x 9.4	81.1
20	3/4"	RV50	83	243.5	34	17	19.05 x 1.65	52.5	25.0 x 15.75	81.1
25	1"	RV70	125	272	48	24	25.4 x 1.65	68.5	50.5 x 22.1	97.1
40	1 1/2"	RV110	171	302.5	70	35	38.1 x 1.65	90	50.5 x 34.8	118.6
50	2"	RV110	171	302.5	70	35	50.8 x 1.65	90	64.0 x 47.5	118.6

Dimensions for valve system On/Off Robolux Type 8806-DI [mm]

Type 8806-DI-T with body type 4C4S CF and feedback head Type 8686 [mm]

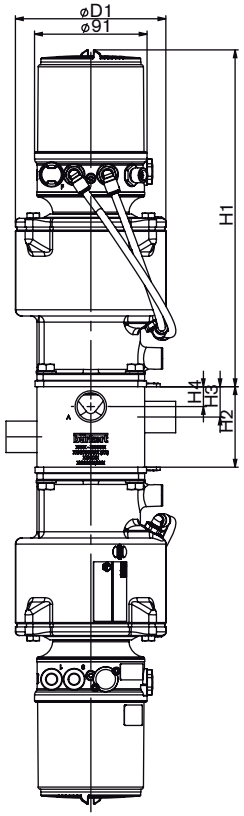

DN [mm]	DN [Zoll]	Actuator size	øD1	H1	H2	H3	H4	L5	Weld end D x s	L1	L3	Clamp DCl x di	L2	L4
									DIN EN ISO 1127 / ISO 4200 / DIN 11866 Series B			DIN 32676 Series B (ISO Tube)		
6	-	RV50	83	243.5	40	18.5	11.5	20.5	10.2 x 1.6	52.5	52.5	-	-	-
8	-	RV50	83	243.5	42	19	9.9	13.6	13.5 x 1.6	52.5	52.5	25.0 x 10.3	81.1	81.1
10	-	RV50	83	243.5	50	21.5	12	18.2	17.2 x 1.6	52.5	52.5	25.0 x 14.0	81.1	-
15	-	RV50	83	243.5	58	25.5	11.7	12.2	21.3 x 1.6	52.5	52.5	50.5 x 18.1	81.1	81.1
20	-	RV70	125	272	67	25.5	15.2	27.8	26.9 x 1.6	68.5	68.5	50.5 x 23.7	97.1	97.1
25	-	RV110	171	302.5	91	35	24.2	40.1	33.7 x 2.0	90	90	50.5 x 29.7	118.6	118.6
32	-	RV110	171	302.5	106	42	22.5	44	42.4 x 2.0	90	91.5	64.0 x 38.4	118.6	-
40	-	RV110	171	302.5	120	46.5	26	47.1	48.3 x 2.0	90	98.2	64.0 x 44.3	118.6	126.8
50	-	RV110	171	302.5	147	53.5	32	53.1	60.3 x 2.0	90	110.2	77.5 x 56.3	118.6	138.8
									DIN 11850 Series 2 / DIN 11866 Series A			DIN 32676 Series A (DIN Tube)		
4	-	RV50	83	243.5	40	18.5	13	22	6.0 x 1.0	52.5	52.5	-	-	-
6	-	RV50	83	243.5	40	18.5	12	21	8.0 x 1.0	52.5	52.5	-	-	-
8	-	RV50	83	243.5	40	18.5	11	20	10.0 x 1.0	52.5	52.5	-	-	-
10	-	RV50	83	243.5	40	19	9	19	13.0 x 1.5	52.5	52.5	34.0 x 10.0	81.1	81.1
15	-	RV50	83	243.5	54	23.5	11.9	13.3	19.0 x 1.5	52.5	52.5	34.0 x 16.0	81.1	81.1
20	-	RV70	125	272	62	22.5	17	26	23.0 x 1.5	68.5	68.5	34.0 x 20.0	86.5	86.5
25	-	RV70	125	272	73	27.5	16.5	29	29.0 x 1.5	68.5	69.5	50.5 x 26.0	90	91
32	-	RV110	171	302.5	95	37	23	41	35.0 x 1.5	90	90	50.5 x 32.0	111.5	111.5
40	-	RV110	171	302.5	104	41.5	22	33	41.0 x 1.5	90	91	50.5 x 38.0	111.5	112.5
50	-	RV110	171	302.5	134	50.5	30	50	53.0 x 1.5	90	103.5	64.0 x 50.0	111.5	125
									ASME BPE / DIN 11866 Series C			ASME BPE		
8	1/4"	RV50	83	243.5	40	18.5	12.5	21.7	6.35 x 0.89	52.5	52.5	25.0 x 4.57	81.1	81.1
10	3/8"	RV50	83	243.5	40	18.5	11	20.1	9.53 x 0.89	52.5	52.5	25.0 x 7.75	81.1	81.1
15	1/2"	RV50	83	243.5	40	8.5	10.3	13.2	12.7 x 1.65	52.5	52.5	25.0 x 9.4	81.1	81.1
20	3/4"	RV50	83	243.5	53	22.5	12	13.4	19.05 x 1.65	52.5	52.5	25.0 x 15.75	81.1	81.1
25	1"	RV70	125	272	65	24.5	16	27	25.4 x 1.65	68.5	68.5	50.5 x 22.1	97.1	97.1
40	1 1/2"	RV110	171	302.5	98	39	21.6	42.4	38.1 x 1.65	90	90	50.5 x 34.8	118.6	118.6
50	2"	RV110	171	302.5	126	48.5	27.7	48.7	50.8 x 1.65	90	101	64.0 x 47.5	118.6	129.6

bürkert

Note
You can fill out the fields directly in the PDF file before printing out the form.

Robolux valves – request for quotation

Please fill out and send to your nearest Bürkert facility* with your inquiry or order

Company	Contact person
Customer no.	Department
Address	Tel./Fax
Postcode/town	E-Mail

■ = mandatory fields to fill out **Quantity** **Required delivery date**

Operating data

Pipe line DN PN

Pipe material

■ **Process medium**

■ **Type of media** ☐ Liquid ☐ Steam ☐ Gas ☐ CIP ☐ SIP

Valve features

Surface finish ☐ Standard Ra 0,6 Int other internal other external

Seal material ☐ EPDM ☐ advanced PTFE other

Medium pressure Pmed

Orifice DN

Type of connection ☐ Weld end ☐ Clamp other

Standard connection ☐ ISO ☐ DIN R2 ☐ ASME BPE other

Pilot pressure min. max.

Please specify item no. if known:

Valve features

Specification key
(automatically transfered from p. 10)

2036						SS			FA07	

Control unit features

☐ **Position Feedback Head Type 8685**

Position feedback
☐ 2x inductive
☐ 2x inductive Namur

Communication
☐ ASI
☐ Flat cable clip, 1 m cable

Supply voltage
☐ 24 V / DC ☐ 8V (Namur)
☐ PTB 13 ATEX D103 X
II 2G c IIC T4
II 2D c T135°C

Please specify item no. if known:

☐ **Control Head Type 8686**

Position feedback
☐ 2x inductive
☐ 2x inductive Namur

Communication
☐ ASI
☐ Flat cable clip, 1 m cable

Supply voltage
☐ 24 V / DC ☐ 8V (Namur)
☐ PTB 13 ATEX D103 X
II 2G c IIC T4
II 2D c T135°C

Please specify item no. if known:

Reset

bürkert

Specification key (other versions and valve blocks on request)

Example	32R	50	AD	VH	SA42	SS	D 11	D 11	FA07	NO23
Specification key						SS			FA07	

Please make a choice

Connections-Seats	
32R	3C2S 3 Connections 2 seats
42R	4C2S 4 Connections 2 seats
44C	4C4S CF 4 Connections 4 seats Cross Flow
44D	4C4S DFP 4 Connections 4 seats Double Flow Path

Actuators*	
50	actuator RV50
70	actuator RV70
11	actuator RV110

***Remark:** The actuator size depends on the size of the port connection (see p. 17)

Diaphragm material	
AD	EPDM
EK	advanced PTFE

Others on request

Body material	
VH	stainless steel 1.4435, AISI 316L

Other body materials on request,
VI stainless steel 1.4435-BN2, AISI 316L-ASME BPE

Port connections
Continued on p. 17

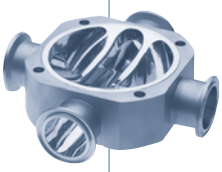

Variable codes		
Surface finish external		
Ra <= 1,6 um (not polished)		*Standard*
electropolished Ra <= 1,6 um		
NO15	electropolished Ra ≤ 0.8 µm	
Surface finish internal		
NO06	mechanical polished Ra ≤ 0.8 µm	
NO23	mechanical polished Ra ≤ 0.6 µm	*Standard*
NO21	mechanical polished Ra ≤ 0.4 µm	
NO16	electropolished Ra ≤ 0.6 µm	*Standard*
NO17	electropolished Ra ≤ 0.4 µm	

Actuators lower side*	
D	double actuator
000	without actuator
1	Seat closed by spring force
2	Seat opened by spring force
5	Seat closed by reduced spring force

Actuators upper side*	
D	double actuator
1	Seat closed by spring force
2	Seat opened by spring force
5	Seat closed by reduced spring force

- Actuator upper side (example)
  D11 = Seat U1 and U2 normally closed by spring action
  D21 = Seat U1 normally open and U2 normally closed by spring action
- Actuator lower side
  Same option is available for the lower side.

Please refer to the section *Valve symbols and flow patterns* p. 3 for more details.
Example:

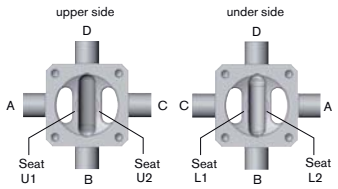

(orientation of the ports A-B-C-D counter clockwise) (orientation of the ports A-B-C-D clockwise)

Reset Form

Specification key, continued (other versions and valve blocks on request)

Port connection weld end

Orifice DN [mm]	DIN EN ISO1127 / ISO 4200 / DIN 11866 series B	DIN 11850 series 2/ DIN11866 series A	ASME BPE / DIN 11866 Series C
Port connections for valves with actuator size RV50			
4		SC40=6x1.0	
6	SA78=10.2x1.6	SC41=8x1.0	
8	SA40=13.5x1.6	SC42=10x1.0	SA90=6.35x0.89
10	SA41=17.2x1.6	SD40=13x1.5	SA91=9.53x0.89
15	SA42=21.3x1.6	SD42=19x1.5	SA92=12.7x1.65
20			SA93=19.05x1.65
Port connections for valves with actuator size RV70			
20	SA43=26.9x1.6	SD43=23x1.5	
25		SD44=29x1.5	SODF=25.4x1.65
Port connections for valves with actuator size RV110			
25	SA44=33.7x2.0		
32	SA45=42.4x2.0	SD45=35x1.5	
40	SA46=48.3x2.0	SD46=41x1.5	SODH=38.1x1.65
50	SA47=60.3x2.0	SD47=53x1.5	SODI=50.8x1.65

По вопросам продаж и поддержки обращайтесь:

Архангельск +7 (8182) 45-71-35
Астана +7 (7172) 69-68-15
Астрахань +7 (8512) 99-46-80
Барнаул +7 (3852) 37-96-76
Белгород +7 (4722) 20-58-80
Брянск +7 (4832) 32-17-25
Владивосток +7 (4232) 49-26-85
Владимир +7 (4922) 49-51-33
Волгоград +7 (8442) 45-94-42
Воронеж +7 (4732) 12-26-70
Екатеринбург +7 (343) 302-14-75
Иваново +7 (4932) 70-02-95
Ижевск +7 (3412) 20-90-75
Иркутск +7 (3952) 56-24-09
Йошкар-Ола +7 (8362) 38-66-61
Казань +7 (843) 207-19-05
Калининград +7 (4012) 72-21-36
Калуга +7 (4842) 33-35-03
Кемерово +7 (3842) 21-56-70
Киров +7 (8332) 20-58-70
Краснодар +7 (861) 238-86-59
Красноярск +7 (391) 989-82-67
Курск +7 (4712) 23-80-45
Липецк +7 (4742) 20-01-75
Магнитогорск +7 (3519) 51-02-81
Москва +7 (499) 404-24-72
Мурманск +7 (8152) 65-52-70
Наб.Челны +7 (8552) 91-01-32
Ниж.Новгород +7 (831) 200-34-65
Нижневартовск +7 (3466) 48-22-23
Нижнекамск +7 (8555) 24-47-85
Новороссийск +7 (8617) 30-82-64
Новосибирск +7 (383) 235-95-48
Омск +7 (381) 299-16-70
Орел +7 (4862) 22-23-86
Оренбург +7 (3532) 48-64-35
Пенза +7 (8412) 23-52-98
Первоуральск +7 (3439) 26-01-18
Пермь +7 (342) 233-81-65
Ростов-на-Дону +7 (863) 309-14-65
Рязань +7 (4912) 77-61-95
Самара +7 (846) 219-28-25
Санкт-Петербург +7 (812) 660-57-09
Саранск +7 (8342) 22-95-16
Саратов +7 (845) 239-86-35
Смоленск +7 (4812) 51-55-32
Сочи +7 (862) 279-22-65
Ставрополь +7 (8652) 57-76-63
Сургут +7 (3462) 77-96-35
Сызрань +7 (8464) 33-50-64
Сыктывкар +7 (8212) 28-83-02
Тверь +7 (4822) 39-50-56
Томск +7 (3822) 48-95-05
Тула +7 (4872) 44-05-30
Тюмень +7 (3452) 56-94-75
Ульяновск +7 (8422) 42-51-95
Уфа +7 (347) 258-82-65
Хабаровск +7 (421) 292-95-69
Чебоксары +7 (8352) 28-50-89
Челябинск +7 (351) 277-89-65
Череповец +7 (8202) 49-07-18
Ярославль +7 (4852) 67-02-35

сайт: burkert.pro-solution.ru | эл. почта: btk@pro-solution.ru
телефон: 8 800 511 88 70

*** To find your nearest Bürkert facility, click on the orange box →**

© Christian Bürkert GmbH & Co. KG