bürkert
FLUID CONTROL SYSTEMS

Type 6430

3/2-way solenoid valve
3/2-Wege-Magnetventil
Électrovanne 3/2 voies

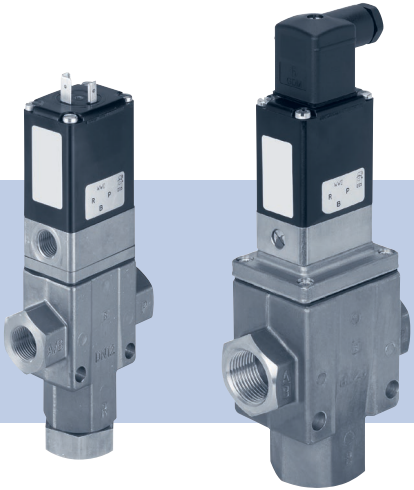

Operating Instructions

Bedienungsanleitung
Manuel d‘utilisation

Table of contents

1 Operating instructions 2
2 Intended use 3
3 Basic safety instructions 3
4 Technical data 5
5 Installation 7
6 Maintenance, troubleshooting 11
7 Spare parts 13
8 Transportation, storage, disposal 14

1 OPERATING INSTRUCTIONS

The operating instructions contain important information.

- Carefully read the operating instructions and follow the safety instructions.
- The operating instructions must be available to each user.
- Liability and warranty for the device will be invalidated if the operating instructions are not followed.

1.1 Symbols

Warning of injuries:

DANGER!
Imminent danger! Serious or fatal injuries.

WARNING!
Potential danger! Serious or fatal injuries.

CAUTION!
Danger! Moderate or minor injuries.

Warning of damage:

NOTE!

Other symbols:

highlights important tips and recommendations.

refers to information in these operating instructions or in other documentation.

▸ highlights instructions to avoid a danger.

→ highlights a procedure which you must carry out.

2 INTENDED USE

Unauthorised use of the Type 6430 solenoid valve may be dangerous to people, nearby equipment and the environment.

- The device is designed for controlling, shutting off and dosing neutral media.
- If devices are explosion-protected (see type label or additional plate), also follow the operating instructions for the coil/pilot control.
- With a properly connected and assembled cable plug, e.g. Bürkert Type 2518, the device complies with degree of protection IP65 in accordance with DIN EN 60529/IEC 60529.
- When using the device, observe the authorised data, operating conditions and deployment conditions specified in the contract documents and in the operating instructions.
- Prerequisites for safe and trouble-free operation are correct transportation, correct storage and installation as well as careful operation and maintenance.
- Only use the device as intended.

2.1 Definition of terms

In these operating instructions the term “device” designates the Type 6430 solenoid valve.

3 BASIC SAFETY INSTRUCTIONS

These safety instructions do not make allowance for any contingencies and events which may arise during installation, operation and maintenance.

Risk of injury from high pressure.

- Before loosening lines and valves, switch off the pressure! Vent or empty the lines.

Risk of injury due to electric shock.

- Before working on the device or system, switch off the power supply. Secure against reactivation.
- Observe the applicable accident prevention and safety regulations for electrical devices.

Risk of burns and fire due to hot device surface if device operated continuously.

- Do not touch the device unless wearing suitable protective gloves.
- Keep the device away from highly flammable substances and media.

Risk of injury due to malfunctioning valves which operate with alternating voltage (AC).

If the magnetic core sticks, the solenoid will overheat and cause the valve to malfunction.

- Monitor valve function.

Risk of short-circuit/escape of medium due to leaking fittings.

- Check that seals are correctly fitted.
- Carefully screw valve and connection lines together.

General hazardous situations.

To prevent injuries, observe the following:

- Use the device only when it is in perfect condition and in accordance with the operating instructions.
- Do not modify the device.
- Secure device or plant to prevent unintentional activation.
- Only trained technicians may perform installation and maintenance work.
- Following interruption of the process, ensure that the process is restarted in a controlled manner.
- Do not mechanically load housing.
- Observe the general rules of technology.

4 TECHNICAL DATA

4.1 Operating conditions

The following values are indicated on the type label:

- Voltage (tolerance ± 10 %) / current type
- Coil power (active power in W - at operating temperature)
- Pressure range[1)]
- Body material: Brass (MS), gunmetal (RG)
- Seal material: NBR (BB), PUR+NBR (PB), FKM (FF), EPDM (AA)

1) *The **version controlled by external air** requires auxiliary pilot air to be at least 2 bar above operating pressure.*
*The **vacuum version** requires a minimum pressure difference of 0.5 bar and is suitable for rough vacuum only.*

Circuit functions 3/2-way valve Type 6430

Standard device/vacuum version			
C (NC)	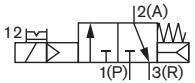	D (NO)	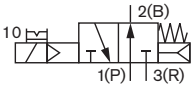
Standard device/vacuum version as pulse valve			
C (NC)	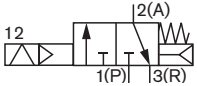		
Version controlled by external air			
C (NC)	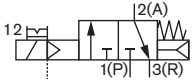	D (NO)	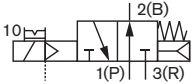

→ For vacuum operation connect the vacuum pump to connection 3 (R).

Protection class: IP65 according to DIN EN 60529 / IEC 60529 with correctly connected and mounted cable plug, e.g. Bürkert Type 2518

4.2 Usage conditions

Ambient temperature: 0...+55 °C

–20...+55 °C for seal material EPDM

Permitted medium temperature and permitted media depending on the seal material:

Seal material	Medium temperature	Permitted media	
		Standard device	Vacuum version and version controlled by external air
NBR	0 °C...+80 °C	Neutral media as compressed air, water, low-viscosity oils	Neutral gases, compressed air, vacuum
PUR/NBR	0 °C...+80 °C		
FKM	0 °C...+90 °C		
EPDM	–20 °C...+90 °C	Oil and grease-free media, cold and hot water	

Viscosity (standard device): 21 mm^2/s

Operating duration: Unless otherwise specified on the type label, the solenoid system is suitable for continuous operation.

Service life: High switching frequency and high pressures will reduce the service life.

Important information to ensure functional reliability during continuous operation!

During a long downtime it is recommended to actuate at least 1–2 switching operations per day.

Liquids and high differential pressure may cause violent water hammers.

4.3 Conformity

The device conforms to the EU directives as per the EU Declaration of Conformity (if applicable).

4.4 Standards

The applied standards, which are used to demonstrate conformity with the directives, are listed in the EU type examination certificate and/or the EU Declaration of Conformity (if applicable).

4.5 Type label

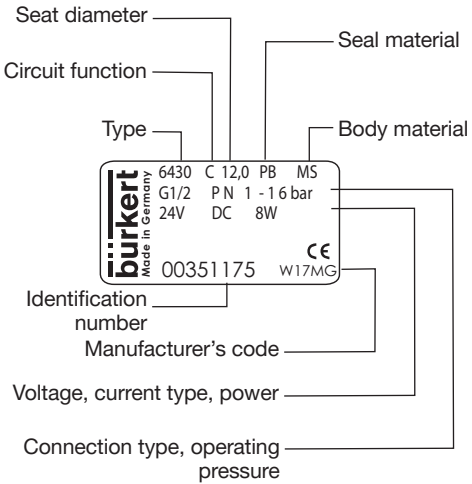

5 INSTALLATION

DANGER!

Risk of injury from high pressure.

- Before loosening lines and valves, switch off the pressure! Vent or empty the lines.

Risk of injury due to electric shock.

- Before working on the device or system, switch off the power supply. Secure against reactivation.
- Observe the applicable accident prevention and safety regulations for electrical devices.

WARNING!

Risk of injury due to improper installation.

- Installation may be carried out by authorised technicians only and with the appropriate tools.

Risk of injury due to unintentional activation of the system and uncontrolled restart.

- Secure the system against unintentional activation.
- Following installation, ensure a controlled restart.

5.1 Before installation

→ Check pipelines for soiling and clean if required.

→ Install a dirt trap upstream of the valve inlet (≤ 500 µm).

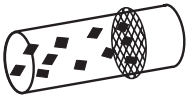

5.2 Installation

Any installation position, preferably actuator face up.

NOTE!

- Ensure that the valve body is not installed twisted.
- Ensure that seal material does not get into the device.

Caution! Risk of breakage!

- Do not use the solenoid as a lever arm.

→ Hold the device on the body using an open-end wrench and screw into the pipeline.

→ Observe pin assignment according to switching function and identification.

5.3 Manual override

NOTE!

Caution! When manual override is locked, the valve can no longer be electrically actuated.

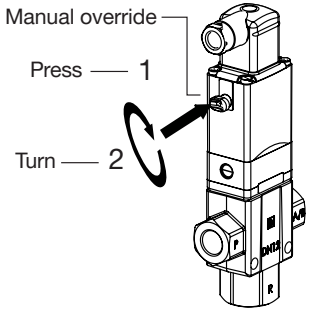

5.4 Electrical connection of cable plug

WARNING!

Risk of injury due to electric shock.

- Before working on the device or system, switch off the power supply. Secure against reactivation.
- Observe the applicable accident prevention and safety regulations for electrical devices.

Risk of electric shock if protective conductor not connected.

- Always connect protective conductor and check electrical continuity between solenoid and body.

Observe specifications on the type label regarding voltage and current type.

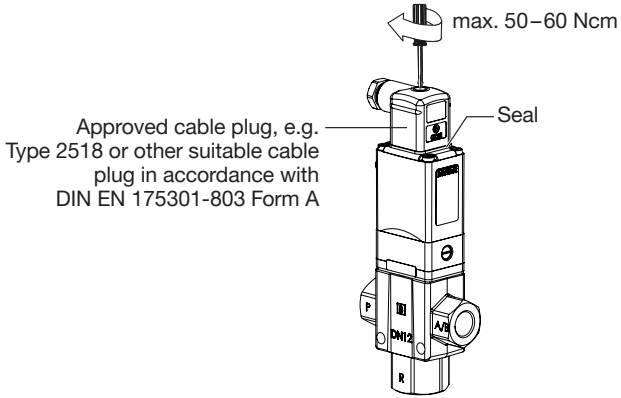

→ Screw cable plug tight (approved types see data sheet), ensuring a torque of 50–60 Ncm.

→ Check that the seal is correctly fitted.

→ Connect protective conductor and check electrical continuity between solenoid and body.

5.4.1 Electrical connection of pulse valve (CF02)

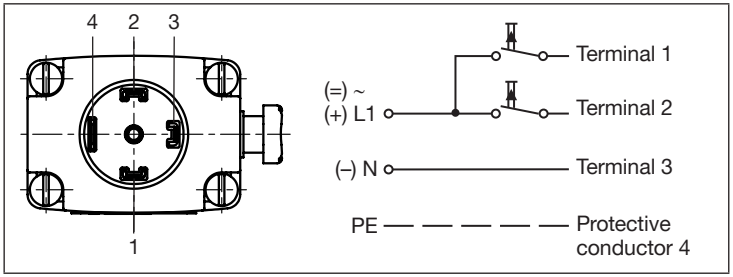

Fig. 1: Circuit diagram connection of pulse valve

The connection terminals in the cable plug are identified with the numerals 1 to 3 according to the terminals on the valve.

→ Connect **pulse valves** (variable code CF 02) as shown in "Fig. 1". Pulse on Terminal 1 closes the valve, pulse on Terminal 2 opens the valve.

→ Connect **standard devices** L1/+ and N/– to terminals 1 and 2 independently of the polarity.

NOTE!

Important information:

- Avoid pulses from being simultaneously generated on both coil windings.
- Other consumers (e.g. relays) must not be switched parallel to the terminals.
- The coil connection, which is not energised, must be electrically isolated (open).
- If 2 or more valves are switched in parallel, ensure that this requirement is met by using bipolar or multipolar switches.
- If versions feature a manual override, this can be used only to a limited extent.

Electrical connection of the position feedback (variable code LF02 or LF03) see operating instructions for Type 1060.

6 MAINTENANCE, TROUBLESHOOTING

DANGER!

Risk of injury from high pressure.

- Before loosening lines and valves, switch off the pressure! Vent or empty the lines.

Risk of injury due to electric shock.

- Before working on the device or system, switch off the power supply. Secure against reactivation.
- Observe the applicable accident prevention and safety regulations for electrical devices.

WARNING!

Risk of injury due to improper maintenance work.

- Maintenance may be carried out by authorised technicians only and with the appropriate tools.

Risk of injury due to unintentional activation of the system and uncontrolled restart.

- Secure the system against unintentional activation.
- Following maintenance, ensure a controlled restart.

NOTE!

Explosion-proof versions may be repaired by the manufacturer only!

Sealed screws must not be opened!

6.1 Faults

The piston may have occupied a middle position during transportation.

To move the piston to the end position:

→ Pressurise connection P and briefly close connection A/B.

→ Press piston with your finger through connection R into the end position.

If faults occur, check whether

- the device has been installed correctly
- the electrical connection and the fluid connection have been properly implemented
- the device is damaged
- all screws have been tightened
- voltage and pressure have been applied
- the pipelines are clean
- the power supply is strong enough
- there is adequate differential pressure
- the volume is adequate

Vacuum version and externally controlled version

- **For vacuum operation** check whether a nominal diameter is used which corresponds to the pump capacity.
- **If a version is externally controlled**, check whether operating pressure and control pressure have been applied (pilot pressure must be at least 2 bar above operating pressure)

Valve does not switch

Possible cause:

- Short-circuit or coil interrupted
- Inadequate power supply
- Interior of the valve soiled
- Medium pressure outside the permitted pressure range
- Manual override locked
- not enough differential pressure available
- the volume is not adequate

Valve does not close

Possible cause:

- Interior of the valve soiled
- Manual override locked
- not enough differential pressure available
- the volume is not adequate

7 SPARE PARTS

DANGER!

Escape of medium through leaking device.

If the O-rings are forgotten or incorrectly inserted when installing the pilot valve, the device will be damaged and medium will escape.

- Before screwing down the device, correctly insert the O-rings into the recesses.

CAUTION!

Risk of injury and/or damage due to incorrect parts.

Incorrect accessories and unsuitable spare parts may cause injuries and damage the device and the area around it.

- Use only original accessories and original spare parts from Bürkert.

7.1 Ordering spare parts

2 spare-part sets are available for each device version (see Chapter “7.2 Overview of spare parts”).

Order the
wearing part set SET 3 (Pos. 2) or the
pilot control with solenoid (Pos. 1)
quoting the identification number of the device.

The identification number of the device can be found on the type label (see also Chapter “4.5” on page 7).

7.2 Overview of spare parts

Standard device Standard-Ausführung	Vacuum version Vakuum-Ausführung	Externally controlled version
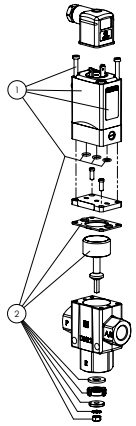	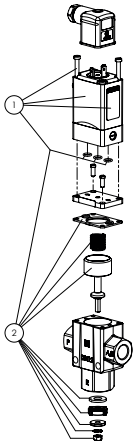	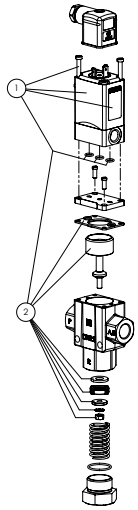

8 TRANSPORTATION, STORAGE, DISPOSAL

NOTE!

Damage in transit due to inadequately protected devices.

- Protect the device against moisture and dirt in shock-resistant packaging during transportation.
- Observe permitted storage temperature.

Incorrect storage may damage the device.

Permitted storage temperature -40…+80 °C.

- Store the device in a dry and dust-free location.

Damage to the environment caused by device parts contaminated with media.

- Observe applicable disposal and environmental regulations.
- Dispose of the device and packaging in an environmentally friendly manner.
- Observe national waste disposal regulations.

→ Dispose of the device and packaging in an environmentally friendly manner.

По вопросам продаж и поддержки обращайтесь:

Архангельск +7 (8182) 45-71-35
Астрахань +7 (8512) 99-46-80
Барнаул +7 (3852) 37-96-76
Белгород +7 (4722) 20-58-80
Брянск +7 (4832) 32-17-25
Владивосток +7 (4232) 49-26-85
Волгоград +7 (8442) 45-94-42
Екатеринбург +7 (343) 302-14-75
Ижевск +7 (3412) 20-90-75
Казань +7 (843) 207-19-05
Калуга +7 (4842) 33-35-03
Кемерово +7 (3842) 21-56-70
Киров +7 (8332) 20-58-70
Краснодар +7 (861) 238-86-59
Красноярск +7 (391) 989-82-67
Курск +7 (4712) 23-80-45
Липецк +7 (4742) 20-01-75
Магнитогорск +7 (3519) 51-02-81
Москва +7 (499) 404-24-72
Мурманск +7 (8152) 65-52-70
Наб.Челны +7 (8552) 91-01-32
Ниж.Новгород +7 (831) 200-34-65
Новосибирск +7 (383) 235-95-48
Омск +7 (381) 299-16-70
Орел +7 (4862) 22-23-86
Оренбург +7 (3532) 48-64-35
Пенза +7 (8412) 23-52-98
Пермь +7 (342) 233-81-65
Ростов-на-Дону +7 (863) 309-14-65
Рязань +7 (4912) 77-61-95
Самара +7 (846) 219-28-25
Санкт-Петербург +7 (812) 660-57-09
Саратов +7 (845) 239-86-35
Сочи +7 (862) 279-22-65
Ставрополь +7 (8652) 57-76-63
Сургут +7 (3462) 77-96-35
Тверь +7 (4822) 39-50-56
Томск +7 (3822) 48-95-05
Тула +7 (4872) 44-05-30
Тюмень +7 (3452) 56-94-75
Ульяновск +7 (8422) 42-51-95
Уфа +7 (347) 258-82-65
Хабаровск +7 (421) 292-95-69
Челябинск +7 (351) 277-89-65
Ярославль +7 (4852) 67-02-35

сайт: burkert.pro-solution.ru | эл. почта: btk@pro-solution.ru
телефон: 8 800 511 88 70