bürkert
FLUID CONTROL SYSTEMS

Direct-acting 2/2 or 3/2 way pivoted armature valve

- Direct-acting, media separated valve with diameter of up to DN4
- Pilot valve with Bürkert-specific flange design (SFB)
- Maintenance-free pivoted armature technology
- Suitable for aggressive alkaline and acidic solutions
- Service-friendly, robust manual override

Type 0331 can be combined with…

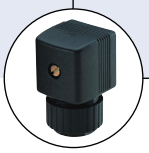

Type 2508

Type 1078

The 0331 valve is a direct-acting, media separated pivoted armature valve. It is available in 3/2 and 2/2 way versions. As a 3/2 way version, it can be used as a distributor or mixing valve. Various diaphragm material combinations and methods of operation are available depending on the application. The standard brass housing satisfies all European drinking water requirements. Stainless steel (316L), PVDF, and polypropylene housing versions complete the offering. The solenoid coils are moulded with a chemically resistant epoxy. The 0331 is equipped with manual override for commissioning and testing. For reduced energy requirements all coils can be delivered with electronic power reduction or as an impulse version. The switching status can be indicated with position feedback as a binary or NAMUR signal. In combination with a plug in accordance with DIN EN 175301-803 Form A, the valves satisfy protection class IP65/67 – in combination with a stainless steel or plastic housing NEMA 4X.

Contents:

Standard version

Technical data	p. 1
Additional options	p. 4
Dimensions & Pin Assignment	p. 5
Ordering chart	p. 6

Explosion proofed version

Technical data	p. 8
Additional options	p. 10
Dimensions & Pin Assignment	p. 11
Ordering chart	p. 12

Technical data	
Available body material	Brass Stainless steel (1.4401) PP (Polypropylene) PVDF (Polyvinyl fluoride) PEEK
Port connection	Flange interface acc. to Bürkert standard (see also sectional dimensions)
Medium	
for NBR	Neutral mediums such as compressed air, town gas, water, hydraulic oil, oils and greases without additives, oxygen
for EPDM	Alkalis, acids to medium concentrations, alkaline washing and bleaching lyes
for FKM	Oxidizing acids and substances, hot oils with additives, salt solutions, waste gases, oxygen
for FFKM	Aggressive mediums, hot air, hot oils
All materials	For more detailed information please refer to our compatibility chart
Medium temperature for body material Brass, Stainless Steel or PEEK	NBR 0 to +80 °C EPDM -30 to +90 °C FKM 0 to +90 °C FFKM +5 to +90 °C
Medium temperature for body material PP or PVDF	NBR 0 to +80 °C EPDM -30 to +80 °C FKM 0 to +80 °C FFKM +5 to +80 °C
Viscosity	Max. 37 mm^2/s
Ambient temperature	Max. +55 °C
Operating voltage	24 V 50 Hz; 110 V 50 Hz; 230 V 50 Hz 120 V 60 Hz; 240 V 60 Hz 12 V DC; 24 V DC; (further voltages on request)
Voltage tolerance	+/– 10 %
Duty cycle for brass and stainless steel	100 %
Duty cycle for **PP** **PVDF** **PEEK**	 40 % ED (60 % intermittent operation) in 30 min for 8 W version 100 % ED for 5 W version 60 % ED (40 % intermittent operation) in 30 min for 8 W version

По вопросам продаж и поддержки обращайтесь:

Архангельск +7 (8182) 45-71-35
Астрахань +7 (8512) 99-46-80
Барнаул +7 (3852) 37-96-76
Белгород +7 (4722) 20-58-80
Брянск +7 (4832) 32-17-25
Владивосток +7 (4232) 49-26-85
Волгоград +7 (8442) 45-94-42
Екатеринбург +7 (343) 302-14-75
Ижевск +7 (3412) 20-90-75
Казань +7 (843) 207-19-05
Калуга +7 (4842) 33-35-03
Кемерово +7 (3842) 21-56-70
Киров +7 (8332) 20-58-70
Краснодар +7 (861) 238-86-59
Красноярск +7 (391) 989-82-67
Курск +7 (4712) 23-80-45
Липецк +7 (4742) 20-01-75
Магнитогорск +7 (3519) 51-02-81
Москва +7 (499) 404-24-72
Мурманск +7 (8152) 65-52-70
Наб.Челны +7 (8552) 91-01-32
Ниж.Новгород +7 (831) 200-34-65
Новосибирск +7 (383) 235-95-48
Омск +7 (381) 299-16-70
Орел +7 (4862) 22-23-86
Оренбург +7 (3532) 48-64-35
Пенза +7 (8412) 23-52-98
Пермь +7 (342) 233-81-65
Ростов-на-Дону +7 (863) 309-14-65
Рязань +7 (4912) 77-61-95
Самара +7 (846) 219-28-25
Санкт-Петербург +7 (812) 660-57-09
Саратов +7 (845) 239-86-35
Сочи +7 (862) 279-22-65
Ставрополь +7 (8652) 57-76-63
Сургут +7 (3462) 77-96-35
Тверь +7 (4822) 39-50-56
Томск +7 (3822) 48-95-05
Тула +7 (4872) 44-05-30
Тюмень +7 (3452) 56-94-75
Ульяновск +7 (8422) 42-51-95
Уфа +7 (347) 258-82-65
Хабаровск +7 (421) 292-95-69
Челябинск +7 (351) 277-89-65
Ярославль +7 (4852) 67-02-35

сайт: burkert.pro-solution.ru| эл. почта: btk@pro-solution.ru
телефон: 8 800 511 88 70

Circuit function

A 2/2 way direct-acting solenoid valve, normally closed

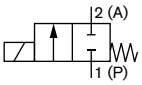

B 2/2 way direct-acting solenoid valve, normally open

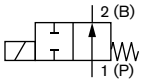

C 3/2 way direct-acting solenoid valve, normally closed

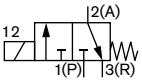

D 3/2 way direct-acting solenoid valve, normally open

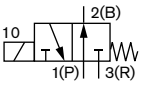

E 3/2 way mixing solenoid valve

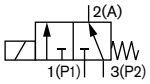

F 3/2 way direct-acting, distribution solenoid valve

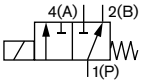

T 3/2 way direct-acting solenoid valve, flow direction optional

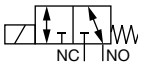

Technical data (continued)

Electrical connection	Tag connector acc. to DIN EN 175301-803 Form A for cable plug Type 2508/2509 (on request also with moulded cable or terminal box)
Type of protection	IP65 with cable plug
Coil thermal isolation class	H
Installation	As required, preferably with actuator upright
Weight [kg] with metal body with plastic body	 0.47 0.40

Standard power consumption

FrequencyAC			FrequencyDC	
Inrush [VA]	**Hold [VA]**	**Operation [W]**	**Cold [W]**	**Warm [W]**
30	15	8	11	8

Impulse (inrush winding)

FrequencyAC		FrequencyDC	
Hold [VA]	**Operation [W]**	**Cold [W]**	**Warm [W]**
20	11	11	8

Response times

Orifice [mm]	FrequencyAC		FrequencyDC	
	Opening [ms]	**Closing [ms]**	**Opening [ms]**	**Closing [ms]**
2-4	8-15	8-15	10-20	10-20

Response times [ms]:

Measured at valve outlet at 6 bar and +20 °C

Opening: Pressure rise 0…90 %,

Closing: Pressure relief 100…10 %

Pressure range and flow rate for brass, stainless steel or PEEK body

Circuit function	DN	K_V value [m³/h]:		Standard[1]		Impulse[2]
		DC	AC [50 or 60 Hz]	Pressure range[4] [bar]	Vacuum[3] Pressure range[4] [bar]	Pressure range[4] [bar]
A / B / C / D / F	2.0	0.08	0.10	0-16 [5]	-0.98-10	0-16 [5]
	3.0	0.12	0.15	0-10	-0.98-6	0-10
	4.0	0.15	0.18	0-5	-0.98-3	0-5
E	2.0	0.08	0.10	0-10	-0.98-8	0-10
	3.0	0.12	0.15	0-6	-0.98-5	0-6
	4.0	0.15	0.18	0-3	-0.98-2.5	0-3
T	2.0	0.08	0.10	0-12	-0.98-8	–
	3.0	0.12	0.15	0-8	-0.98-5	–
	4.0	0.15	0.18	0-4	-0.98-3	–

Pressure range and flow rate PVDF or PP body

Circuit function	DN	K_V value water [m³/h]	Standard[1]			Impulse[2]
			Pressure range[4] [bar] AC [50 or 60 Hz]	Pressure range[4] [bar] DC	Vacuum Pressure range[4] [bar]	Pressure range[4] [bar]
A / B / C / D / F	2.0	0.1	0-16 [5]	0-12	-0.98-10	0-12
	3.0	0.15	0-10	0-8	-0.98-6	0-8
	4.0	0.18	0-5	0-4	-0.98-3	0-4
E / T	2.0	0.1	0-10	0-7	-0.98-7	0-7
	3.0	0.15	0-6	0-4	-0.98-5	0-4
	4.0	0.18	0-3	0-2.5	-0.98-2.5	0-2

[1] Heat output 8 W
[2] Inrush power 11 W
[3] Vacuum possible for all seal materials
[4] Pressure values [bar] for atmospheric pressure
[5] For seal material FKM and FFKM the max. mediums pressure is 12 bar

Use in other circuit functions

The valves are fitted with different springs for a particular circuit function
When used in other circuit functions, the maximum operating pressure varies according to the following tables

Metal body (8 W respectively 11 W)																		
Circuit function	Max. operating pressure [bar] when using the valve in a new circuit function																	
	Orifice 2 mm						Orifice 3 mm						Orifice 4 mm					
	A[1]	B[1]	C	D	E	F	A	B	C	D	E	F	A	B	C	D	E	F
C	16	1.5	16	1.5	1.5	16	10	1	10	1	1	10	5	0.8	5	0.8	0.8	5
D	4	16	4.5	16	4	4	2.5	10	2.5	10	2	3	2	5	2	5	2	2
T	8	8	10	10	10	8	6	6	6	6	6	6	3	3	3	3	3	3

Plastic body (8 W respectively 11 W)																		
Circuit function	Max. operating pressure [bar] when using the valve in a new circuit function																	
	Orifice 2 mm						Orifice 3 mm						Orifice 4 mm					
	A[1]	B[1]	C	D	E	F	A	B	C	D	E	F	A	B	C	D	E	F
C	16	1.5	16	1.5	1.5	16	10	1	10	1	1	10	5	0.8	5	0.8	0.8	5
D	4	16	4.5	16	4	4	2.5	10	2.5	10	2	3	2	5	2	5	2	2
F	16	1.5	10	1.5	1.5	16	6	1	6	1	1	10	4	1	4	1	1	

[1] For circuit function A and B the valve must be connected acc. to the pin assignment of 3/2 way valve.

Construction and material specifications

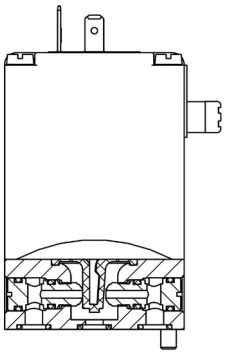

Coil: Epoxy

Diaphragm:
EPDM / FKM / FFKM / NBR

Seat:
Brass
Stainless steel (1.4401)
PP (Polypropylene)
PVDF (Polyvinyl fluoride)
PEEK

Valve body:
Brass
Stainless steel (1.4401)
PP (Polypropylene)
PVDF (Polyvinyl fluoride)
PEEK

O-ring
EPDM / FKM / FFKM / NBR

Additional options

Option	Var. Code	Description
Impulse version	CF02	Bistable magnetic system with inrush and drop-off coil;Continuous operation or operation with short current pulses (min. 150 ms) possible
Oxygen versions	NL02	Suitable for applications with oxygen (non-metal materials that are in contact with the medium, are tested and approved according to BAM)
Increased purity requirements e.g. oil, grease and silicone-free	NL50/NL05	Wetted parts are specially cleaned and packaged in accordance with the valves
Increased tightness requirements	PCxx	Standard units are tested at 10-2 mbar x l / sec; feasible up to 106 mbar
Electrical feedback	LF02 / LF03	See Type 1060
High-power electronics	CZ05	Inrush power 60 W, nominal holding current 3 W; with plastic versions 100 % ED is now feasible
Vacuum version	NA02	Suitable for Vacuums up to -0.98 bar
Increased purity and tightness requirements	NA03	Wetted parts are specially cleaned and leak tested to 10-4 mbar x l/sec
Increased purity and tightness requirements and Vacuum version	NA01	Wetted parts are specially cleaned and leak tested up to 10-4 mbar x l/sec and suited for Vacuum up to -0.98 bar
Coil with reduced power (5 W)		Devices have lower pressure range; with plastic versions 100 % ED is now feasible
Cable plug	JFxx / JGxx	Cable plug is included in delivery. Cable plug versions (acc. to DIN EN 175301-803 Form A), see datasheet Type 2508 and 2509
Manifold with banjo bolt	LG 09	Due to the banjo bolt a direct attachment is possible (for example, to externally controlled pneumatic drives)
Approvals	PD01	CSA General Purpose valve
	PD02	UL recognized General Purpose valve CSA General Purpose valve
	PD45	FM explosionproof for class I Div. 1 and dust–ingnitionproof for class II / III Div. 1 T4 CSA General Purpose valve for hazardous location class I / II Div.2 and class III T4
	PD07	DNV–GL (formerly Germanischer Lloyd)
possible conformities (depending on the assembly)		EAC ; drinking water; FDA;

Dimensions [mm]

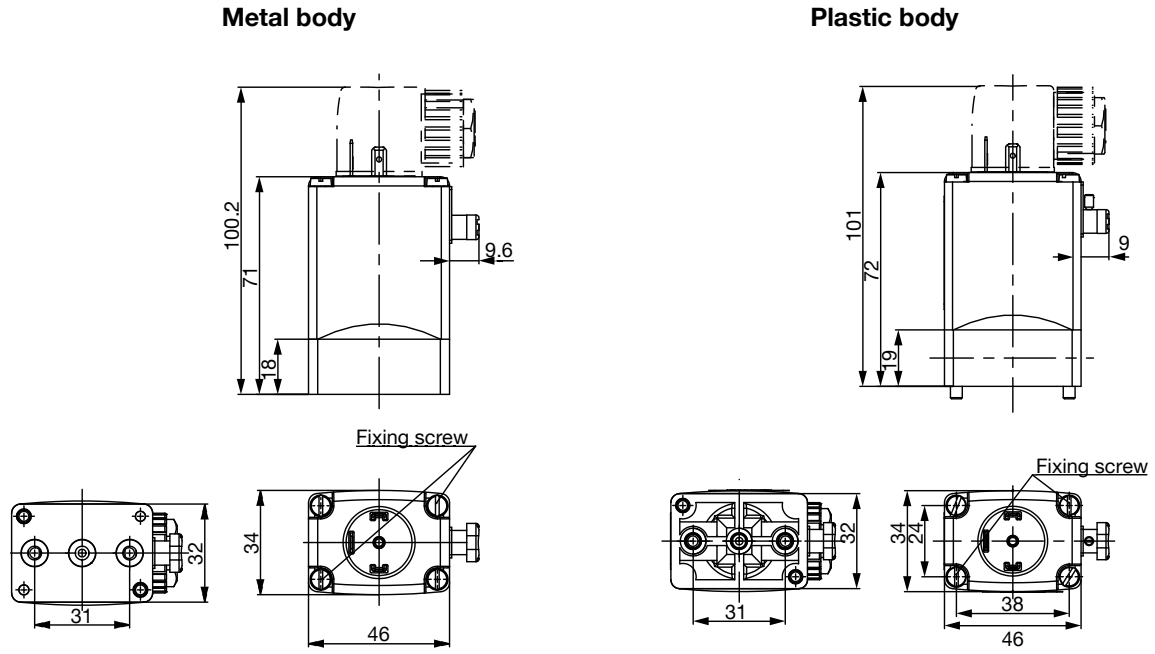

PI_N Assignments

The connections marked with 1, 2 and 3 are labelled in the drawing according to the circuit function table on the left.

Circuit function	Connection 1	Connection 2	Connection 3
A	P	A	
B		B	P
C	P	A	R
D	R	B	P
E	P1	A	P2
F	A	P	B

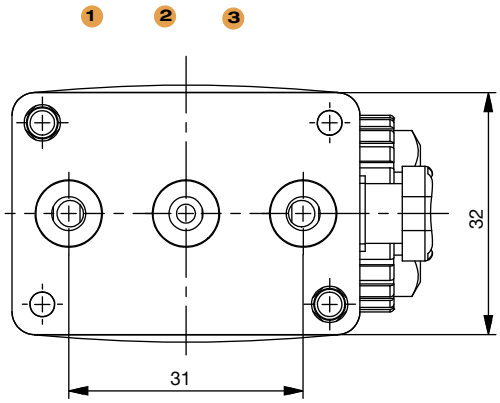

Ordering chart (products with reduced delivery time)

All devices with manual override and cable plug Type 2508

Circuit function	Orifice [mm]	Seal Material	Body and seat material	Article no. per voltage/frequency [V/Hz]			
				024/DC	024/50	110/50	230/50
A	04.0	FKM	Polypropylene	088352	–	–	020278
C	02.0	NBR	Brass	041183	041184	044989	041188
	02.0	FKM	Stainless steel	048354	–	–	–
	02.0	EPDM	PVDF	–	–	–	130301
	03.0	NBR	Brass	041195	041198	041203	041209
	03.0	FKM	Stainless steel	045796	–	–	–
D	02.0	NBR	Brass	041234	041235	041798	041242
	02.0	EPDM	PVDF	079663	–	–	–
	02.0	FKM	PVDF	–	–	–	078859
	03.0	NBR	Brass	041247	041248	041531	041254
E	02.0	NBR	Brass	042061	042799	040064	041265
	03.0	NBR	Brass	042980	043104	046843	041270
	03.0	EPDM	Polypropylene	021892	–	–	–
T	02.0	FKM	Brass	124953	124954	124955	124956
	03.0	FKM	Brass	124958	124959	124960	124961

Ordering chart (products with reduced delivery time)

All devices with manual override and cable plug Type 2508 and manifold (banjo version)

Circuit function	Orifice [mm]	Seal Material	Body and seat material	Article no. per voltage/frequency [V/Hz]			
				024/DC	024/50	110/50	230/50
C	02.0	NBR	Brass	041191	–	–	041192
	03.0	NBR	Brass	041217	041219	041223	041228
	03.0	FKM	Brass	041231	–	–	041233
E	02.0	NBR	Brass	123092	–	–	043913

Ordering chart for flange valve manifolds and accessories

Manifolds (the plates connecting thread is G ¼)

Number of valve positions [mm]	Length A	Hole spacing B [mm]	Article no.		
			Material, aluminum anodized	Material, stainless steel	Material, brass
1	32	–	005043	on request	on request
2	69	–	005045	on request	612071
3	106	37	005366	on request	on request
4	143	74	005294	658925	006324
5	180	111	005295	on request	on request
6	217	148	005296	on request	006326
7	254	185	005403	on request	on request
8	291	222	006074	on request	–

Accessories for manifolds

	Material	Seal material	Article no.
Covering plate (for empty valve places)	Stainless steel	FKM	265294
Covering plate (for empty valve places)	Aluminium anodized	NBR	005625
Nipple (for connecting the collecting ducts of 2 manifolds)	Steel lined	FKM	005049
Nipple (for connecting the collecting ducts of 2 manifolds)	Stainless steel	FKM	007376
Nipple (for connecting the manifolds; connecting duct is closed)	Steel lined	NBR	006049

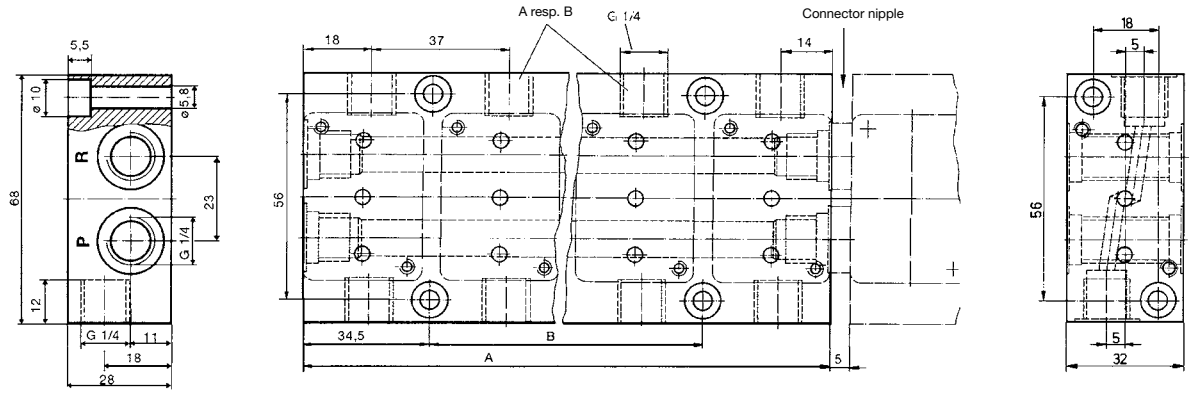

Multiple manifold

Single manifold

Circuit function

A 2/2 way direct-acting solenoid valve, normally closed

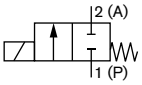

B 2/2 way direct-acting solenoid valve, normally open

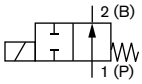

C 3/2 way direct-acting solenoid valve, normally closed

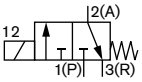

D 3/2 way direct-acting solenoid valve, normally open

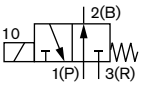

E 3/2 way mixing solenoid valve

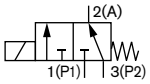

F 3/2 way direct-acting, distribution solenoid valve

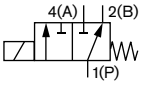

T 3/2 way direct-acting solenoid valve, flow direction optional

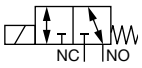

Explosion proofed version

Technical data	
Available body material	Brass, stainless steel (1.4401), PP (Polypropylene) PVDF (Polyvinyl fluoride), PEEK
Port connection	Flange interface acc. to Bürkert standard 1000225877 (see also sectional dimensions)
Seal material	EPDM / FKM / FFKM / NBR
Medium	
for NBR	Neutral mediums such as compressed air, town gas, water, hydraulic oil, oils and greases without additives, oxygen
for EPDM	Alkalis, acids to medium concentrations, alkaline washing and bleaching lyes
for FKM	Oxidizing acids and substances, hot oils with additives, salt solutions, waste gases, oxygen
for FFKM	Aggressive mediums, hot air, hot oils
All materials	For more detailed information please refer to our compatibility chart
Medium temperature for body material Brass, Stainless steel or PEEK	NBR 0 to +80 °C EPDM -30 to +90 °C FKM 0 to +90 °C FFKM +5 to +90 °C
Medium temperature for body material PP or PVDF	NBR 0 to +80 °C EPDM -30 to +80 °C FKM 0 to +80 °C FFKM +5 to +80 °C
Viscosity	Max. 37 mm^2/s
Ambient temperature	Max. +55 °C
Voltages	24 V; 230 V (further voltages on request)
Frequency	AC/DC
Voltage tolerance	+/– 10 %
Duty cycle	100 %
Electrical connection	Moulded cable (For more detailed information, refer to the instruction manual ACP016, chapter 7.6.1) Terminal box without safety fuse
Type of protection	IP65
Coil thermal isolation class	H
Ignition protection	II 2 G Ex mb IIC T4 Gb II 2 D EX mb IIIC T130° Db
Certificate	EPS 16 ATEX 1 111 X IECEx EPS 16.0049X
Installation	As required, preferably with actuator upright

Cycling rate

	Max. cycling rate	Mediums temp.	Ambient temp.
Variant 1	20/min	Up to +70 °C	Up to +40 °C
Variant 2	5/min	Up to +90 °C	Up to +40 °C

Power consumption

Inrush [W]	Operation [W]
40	3

Response times

Orifice [mm]	Opening [ms]	Closing [ms]
2-4	30	40

Response times [ms]:
Measured at valve outlet at 6 bar and +20 °C
Opening: Pressure rise 0…90 %,
Closing: Pressure relief 100…10 %

Technical data (continued)

Pressure range and flow rate for brass, stainless steel or PEEK housings

Circuit function	DN	K_V value water [m^3/h]	Standard pressure range[2) 3)] [bar]	Vacuum pressure range [bar]
A / B / C / D / F	2.0	0.10	0-16	-0.98-10
	3.0	0.15	0-10	-0.98-6
	4.0	0.18	0-5	-0.98-3
E	2.0	0.10	0-10	-0.98-8
	3.0	0.15	0-6	-0.98-5
	4.0	0.18	0-3	-0.98-2.5
T	2.0	0.10	0-12	-0.98-8
	3.0	0.15	0-8	-0.98-5
	4.0	0.18	0-4	-0.98-3

Pressure range and flow rate for PVDF or PP housings

Circuit function	DN	K_V value water [m^3/h]	Standard pressure range[2) 3)] [bar]	Vacuum pressure range [bar]
A / B / C / D / F	2.0	0.10	0-16	-0.98-10
	3.0	0.15	0-10	-0.98-6
	4.0	0.18	0-5	-0.98-3
E / T	2.0	0.10	0-10	-0.98-8
	3.0	0.15	0-6	-0.98-5
	4.0	0.18	0-3	-0.98-2.5

[1)] Measured at +20 °C, 1 bar[2)] pressure at valve inlet and free outlet.
[2)] Devices with FKM or FFKM diaphragm are reduced to a max. pressure of 12 bar
[3)] Pressure values [bar]: Measured as overpressure to the atmospheric pressure

Other circuit functions

The valves are fitted with different springs for a particular circuit function when used in other circuit functions the permissable operating pressure changes acc. to the following table.

Metal body																		
Circuit function	Max. operating pressure [bar] when using the valve in a new circuit function																	
	Orifice 2 mm						Orifice 3 mm						Orifice 4 mm					
	A[1]	B[1]	C	D	E	F	A	B	C	D	E	F	A	B	C	D	E	F
C	16	1.5	16	1.5	1.5	16	10	1	10	1	1	10	5	0.8	5	0.8	0.8	5
D	4	16	4.5	16	4	4	2.5	10	2.5	10	2	3	2	5	2	5	2	2
T	8	8	10	10	10	8	6	6	6	6	6	6	3	3	3	3	3	3

Plastic body																		
Circuit function	Max. operating pressure [bar] when using the valve in a new circuit function																	
	Orifice 2 mm						Orifice 3 mm						Orifice 4 mm					
	A[1]	B[1]	C	D	E	F	A	B	C	D	E	F	A	B	C	D	E	F
C	16	1.5	16	1.5	1.5	16	10	1	10	1	1	10	5	0.8	5	0.8	0.8	5
D	4	16	4.5	16	4	4	2.5	10	2.5	10	2	3	2	5	2	5	2	2
F	16	1.5	10	1.5	1.5	16	6	1	6	1	1	10	4	1	4	1	1	

[1] For circuit function A and B the valve must be connected acc. to the pin assignment of 3/2 way valve.

Additional options

Option	Variable Code	Description
Oxygen versions	NL02	Suitable for applications with oxygen (non-metal materials that are in contact with the medium, are tested and approved according to BAM)
Increased purity requirements e.g. oil, grease and silicone-free	NL50/NL05	Wetted parts are specially cleaned and packaged in accordance with the valves
Increased hermetic requirements	PCxx	Standard units are tested at 10-2 mbar x l / sec; feasable up to 10-6 mbar
Vacuum version	NA02	Suitable for Vacuums up to -0.98 bar
Increased purity and hermetic requirements	NA03	Wetted parts are specially cleaned and leak tested to 10-4 mbar x l/sec
Increased purity and hermetic requirements and Vacuum version	NA01	Wetted parts are specially cleaned and leak tested up to 10-4 mbar x l/sec and suited for Vacuum up to -0.98 bar
Electrical feedback	CF15	Coil with intrinsically safe proximity switches (PTB 00 ATEX 2048X) instead of manual override
Manifold with banjo bolt	LG 09	Due to the banjo bolt a direct attachement is possible (for example, to externally controlled pneumatic drives)
potential conformities (depending on design)		EAC ; drinking water; FDA;

Dimensions [mm]

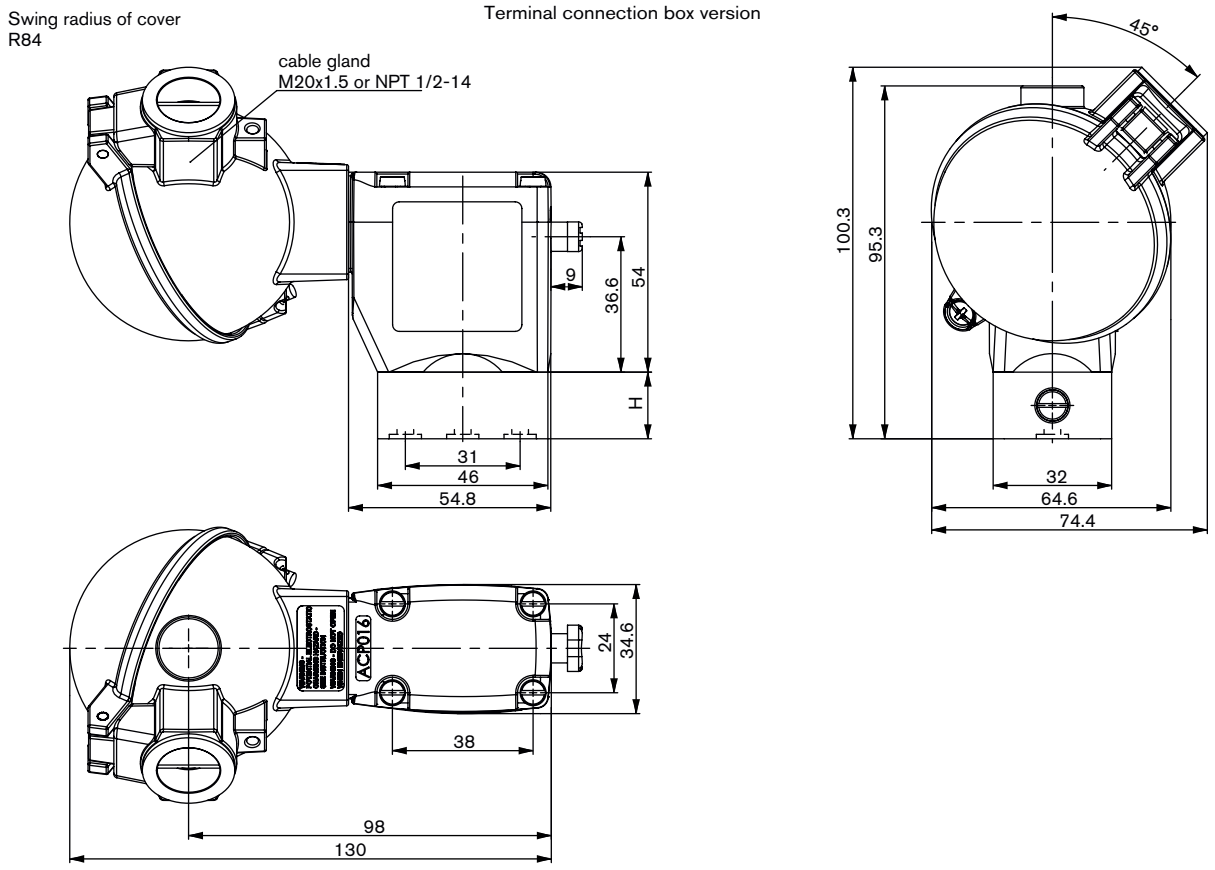

Version	H
Brass/Stainless steel	18
PP/PD	19

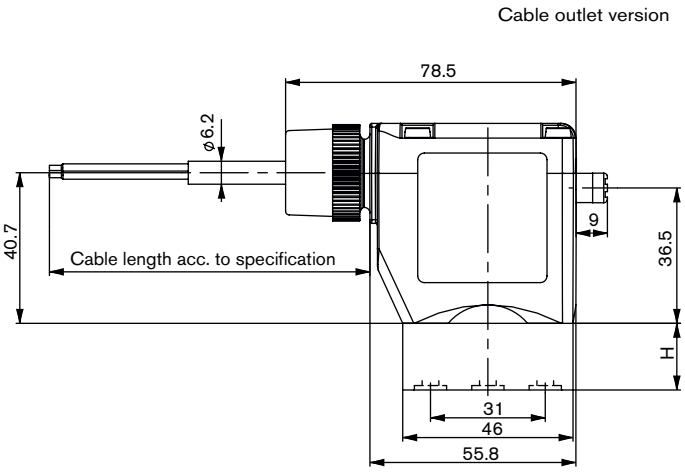

PIN Assignments

The connections marked with 1, 2 and 3 are labelled in the drawing according to the circuit function table on the left.

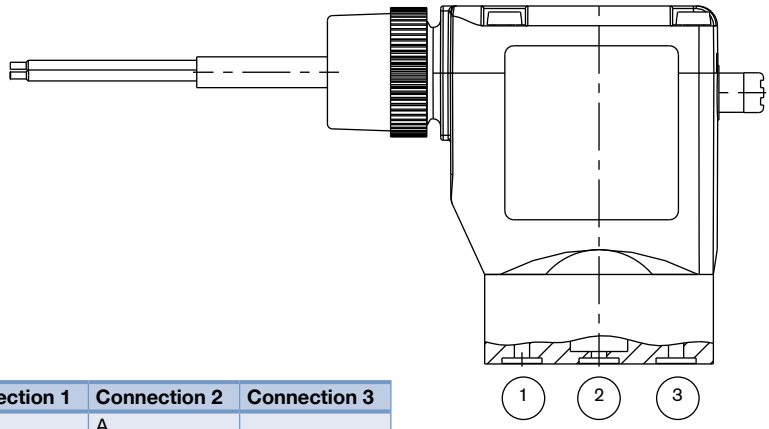

Circuit function	Connection 1	Connection 2	Connection 3
A	P	A	
B		B	P
C	P	A	R
D	R	B	P
E	P1	A	P2
F	A	P	B

Ordering chart

All devices with manual override

Circuit function	Orifice [mm]	Seal Material	Housing or seat material	Electrical connection	Article no. per voltage/ frequency [V/Hz]		
					024/UC	110/UC	230 resp. 240 /UC
A	03.0	FKM	Stainless steel	Cable	305882	–	305877
C	02.0	NBR	Stainless steel	Terminal box	–	305795	–
C	02.0	FKM	Stainless steel	Terminal box	–	305775	–
C	02.0	NBR	Stainless steel	Cable	305875	–	–
C	03.0	NBR	Brass	Cable	305857	–	305853
C	03.0	FKM	Stainless steel	Cable	305883	305880	305881
D	02.0	NBR	Brass	Terminal box	–	305772	–
D	02.0	NBR	Brass	Cable	305899	305907	305862
D	02.0	NBR	Stainless steel	Cable	305872	–	305859
D	02.0	NBR	Stainless steel	Terminal box	–	305794	–
D	03.0	NBR	Brass	Cable	305874	–	–
T	02.0	FKM	Stainless steel	Cable	305871	305886	305861
T	02.0	FKM	Stainless steel	Terminal box	–	305784	305786
T	02.0	NBR	Stainless steel	Cable	305869	–	305870
T	02.0	EPDM	Stainless steel	Terminal box	–	–	305790
T	02.0	NBR	Brass	Cable	305863	305865	305866
T	02.0	NBR	Brass	Terminal box	–	–	305777
T	02.0	FKM	Brass	Cable	305867	–	305868
T	02.0	FKM	Brass	Terminal box	–	305779	305780

Note: Further versions on request

Ex-Cable glands

(polyamide version included in delivery / surcharge applied for brass nickel plated version

Photo	Descrip-tion	Ex Approvals		Article no.	Drawing
		Certification	Identification		
	Brass. nickel-plated, 6-13 mm	PTB 04 ATEX 1112 X, IECEx PTB 13.0027X	II 2 G Ex e IIC Gb, II 2 D Ex tb IIIC Db IP68,	773278	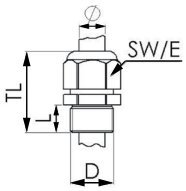 TL 29-37 mm; L 6 mm; D 20; SW 24 mm; E 27 mm
	Polyamide, 7-13 mm	PTB 13 ATEX 1015 X, IECEx PTB 13.0034X	II 2 G Ex e IIC Gb, II 2 D Ex tb IIIC Db IP68	773277	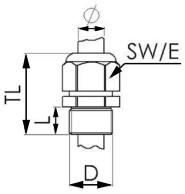 TL 36-45 mm; L 10 mm; D 20; SW 24 mm; E 28 mm

Special tool to turn the junction box (not included in delivery)

Photo	Description	Article no.
	Set SC02-AC10 Special wrench Service Manual	293488

По вопросам продаж и поддержки обращайтесь:

Архангельск +7 (8182) 45-71-35
Астрахань +7 (8512) 99-46-80
Барнаул +7 (3852) 37-96-76
Белгород +7 (4722) 20-58-80
Брянск +7 (4832) 32-17-25
Владивосток +7 (4232) 49-26-85
Волгоград +7 (8442) 45-94-42
Екатеринбург +7 (343) 302-14-75
Ижевск +7 (3412) 20-90-75
Казань +7 (843) 207-19-05
Калуга +7 (4842) 33-35-03
Кемерово +7 (3842) 21-56-70
Киров +7 (8332) 20-58-70
Краснодар +7 (861) 238-86-59
Красноярск +7 (391) 989-82-67
Курск +7 (4712) 23-80-45
Липецк +7 (4742) 20-01-75
Магнитогорск +7 (3519) 51-02-81
Москва +7 (499) 404-24-72
Мурманск +7 (8152) 65-52-70
Наб.Челны +7 (8552) 91-01-32
Ниж.Новгород +7 (831) 200-34-65
Новосибирск +7 (383) 235-95-48
Омск +7 (381) 299-16-70
Орел +7 (4862) 22-23-86
Оренбург +7 (3532) 48-64-35
Пенза +7 (8412) 23-52-98
Пермь +7 (342) 233-81-65
Ростов-на-Дону +7 (863) 309-14-65
Рязань +7 (4912) 77-61-95
Самара +7 (846) 219-28-25
Санкт-Петербург +7 (812) 660-57-09
Саратов +7 (845) 239-86-35
Сочи +7 (862) 279-22-65
Ставрополь +7 (8652) 57-76-63
Сургут +7 (3462) 77-96-35
Тверь +7 (4822) 39-50-56
Томск +7 (3822) 48-95-05
Тула +7 (4872) 44-05-30
Тюмень +7 (3452) 56-94-75
Ульяновск +7 (8422) 42-51-95
Уфа +7 (347) 258-82-65
Хабаровск +7 (421) 292-95-69
Челябинск +7 (351) 277-89-65
Ярославль +7 (4852) 67-02-35

сайт: burkert.pro-solution.ru| эл. почта: btk@pro-solution.ru
телефон: 8 800 511 88 70