bürkert
FLUID CONTROL SYSTEMS

LFM Liquid Flow Meter

- High dynamic flow measurement
- Applicable for liquid flow measurement up to 600 ml/min (36 l/h)
- No moving parts in medium
- Fieldbus optional
- Compact version

Type 8708 can be combined with…

Type 1150
Multi-channel program controller

Type 6606
2/2-way Solenoid Valve

Type 6011
2/2-way Solenoid Valve

MassFlowCommunicator
Communications Software

Type 8708 is an instrument for liquid flow control in process technology.

The actual value supplied by the sensor is transmitted through the digital electronics and over a standard signal output or a field bus interface.

In the device two calibration curves can be stored, which the user is able to switch between.

Typical application areas of liquid measurement are:

- Heat treatment,
- Machine tools,
- Fuel cell technology,
- Packaging technology,
- Material coating,
- Bio reactors.

The device offers a particularly compact solution.

Technical data	
Full scale range (Q_{nom})	0.6 to 36 l/h (10 to 600 ml/min) re. water
Operating medium	Clean and low viscous liquids
Viscosity	0.4 to 4 cSt
Max. operating pressure (at inlet)	Up to max. 10 barg; typical max. 2 barg
Calibration medium	Water (conversion to operating medium with correcting function)
Medium temperature	10 to + 40 °C
Ambient temperature	0 to + 55 °C
Accuracy	±1.5 % o.R. ±0.5 % F.S.
Repeatability	±0.5 % F.S.
Turn-down ratio	1:10
Response time ($t_{95\%}$)	< 500 ms
Body material	Stainless steel
Housing	PC (Polycarbonate)
Sealing material	FKM, EPDM, FFKM
Port connection	G 1/8, NPT 1/8, G 1/4, NPT 1/4, sub-base
Control valve **Valve orifices**	Proportional valve; normally close; depending on flow range and pressure
Electrical Connection	Sub-D 15-pin plug M12 (PROFIBUS) 5-pin socket M12 (DeviceNet, CANopen) 5-pin plug
Operating voltage	24 V DC ± 10 %
Residual ripple	< 2 %

Power consumption	Max. 2.5 W (5 W with fieldbus version)
Output signal (actual value)	0-5 V, 0-10 V, 0-20 mA *or* 4-20 mA
Max. current (voltage output)	10 mA
Max. burden (current output)	600 Ω
Alternative output signal	Digital with fieldbus: ▪ PROFIBUS DP V1 ▪ DeviceNet ▪ CANopen
Type of protection	IP40
Dimensions [mm] (without compression fittings)	Standard version: 107 x 115.5 x 28 (BxHxT) Sub-base version: 107 x 115.5 x 43 (BxHxT)
Total weight	Approx. 900 g
Installation	Horizontal or vertical
Light emitting diodes (Default functions, other functions programmable)	Indication for: 1. Power 2. Communication (only in fieldbus version) Limit (only in analogue version) 3. Error
Binary inputs (Default functions, other functions programmable)	Two: 1. not assigned 2. not assigned
Binary output (Default functions, other functions programmable)	One relay output for: Limit (Q_{nom} almost reached) Capacity: max. 25 V, 1 A, 25 VA

По вопросам продаж и поддержки обращайтесь:

Архангельск +7 (8182) 45-71-35
Астана +7 (7172) 69-68-15
Астрахань +7 (8512) 99-46-80
Барнаул +7 (3852) 37-96-76
Белгород +7 (4722) 20-58-80
Брянск +7 (4832) 32-17-25
Владивосток +7 (4232) 49-26-85
Владимир +7 (4922) 49-51-33
Волгоград +7 (8442) 45-94-42
Воронеж +7 (4732) 12-26-70
Екатеринбург +7 (343) 302-14-75
Иваново +7 (4932) 70-02-95
Ижевск +7 (3412) 20-90-75
Иркутск +7 (3952) 56-24-09
Йошкар-Ола +7 (8362) 38-66-61
Казань +7 (843) 207-19-05
Калининград +7 (4012) 72-21-36
Калуга +7 (4842) 33-35-03
Кемерово +7 (3842) 21-56-70
Киров +7 (8332) 20-58-70
Краснодар +7 (861) 238-86-59
Красноярск +7 (391) 989-82-67
Курск +7 (4712) 23-80-45
Липецк +7 (4742) 20-01-75
Магнитогорск +7 (3519) 51-02-81
Москва +7 (499) 404-24-72
Мурманск +7 (8152) 65-52-70
Наб.Челны +7 (8552) 91-01-32
Ниж.Новгород +7 (831) 200-34-65
Нижневартовск +7 (3466) 48-22-23
Нижнекамск +7 (8555) 24-47-85
Новороссийск +7 (8617) 30-82-64
Новосибирск +7 (383) 235-95-48
Омск +7 (381) 299-16-70
Орел +7 (4862) 22-23-86
Оренбург +7 (3532) 48-64-35
Пенза +7 (8412) 23-52-98
Первоуральск +7 (3439) 26-01-18
Пермь +7 (342) 233-81-65
Ростов-на-Дону +7 (863) 309-14-65
Рязань +7 (4912) 77-61-95
Самара +7 (846) 219-28-25
Санкт-Петербург +7 (812) 660-57-09
Саранск +7 (8342) 22-95-16
Саратов +7 (845) 239-86-35
Смоленск +7 (4812) 51-55-32
Сочи +7 (862) 279-22-65
Ставрополь +7 (8652) 57-76-63
Сургут +7 (3462) 77-96-35
Сызрань +7 (8464) 33-50-64
Сыктывкар +7 (8212) 28-83-02
Тверь +7 (4822) 39-50-56
Томск +7 (3822) 48-95-05
Тула +7 (4872) 44-05-30
Тюмень +7 (3452) 56-94-75
Ульяновск +7 (8422) 42-51-95
Уфа +7 (347) 258-82-65
Хабаровск +7 (421) 292-95-69
Чебоксары +7 (8352) 28-50-89
Челябинск +7 (351) 277-89-65
Череповец +7 (8202) 49-07-18
Ярославль +7 (4852) 67-02-35

сайт: burkert.pro-solution.ru | эл. почта: btk@pro-solution.ru
телефон: 8 800 511 88 70

Measurement principle

The sensor measures the flow by means of differential pressure. An orifice in the main channel causes pressure loss at liquid flow which is measured by the differential pressure sensor. The sensor feedbacks a precise and temperature compensated signal out of which the electronics calculates the corresponding flow.

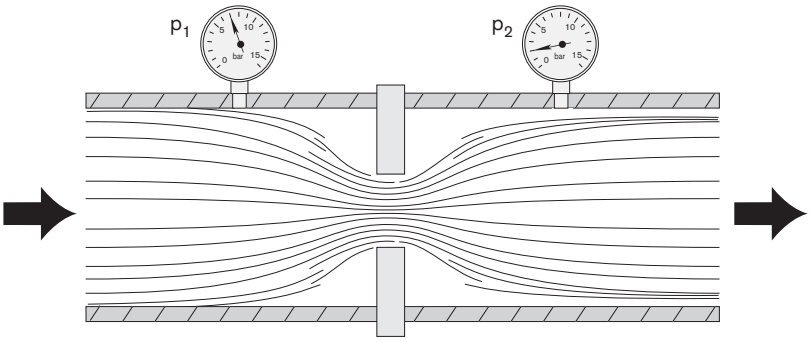

To avoid a blockage of the aperture by contaminated mediums an upstream filter is recommended.

Notes regarding the selection of the unit

The decisive factors for the perfect functioning of an LFM within the application are the fluid compatibility, the pressure range and the correct choice of the flow meter range. The pressure loss over the LFM averages in typical applications approx. 500 mbar, with up to 2 barg inlet pressure.

The specification of the inlet pressure, p_{1max}, which can be expected is necessary for the selection of the suitable differential pressure sensor.

The request form on page 5 contains the relevant fluid specification. Please use the experience of Bürkert engineers already in the design phase and provide us with a copy of your request containing the necessary data together with your inquiry or order.

Ordering chart for accessories (Connectors are not included in the delivery)

Article	Item no.
15-pin Electrical Connection	
Sub-D 15-pin socket (solder connection)	918 274
Sub-D cover for Sub-D socket, with screw locking device	918 408
Sub-D 15-pin socket with prefabricated 5m cable on one side	787 737
Sub-D 15-pin socket with prefabricated 10m cable on one side	787 738
PROFIBUS DP	
M12 plug	918 198
M12 socket (coupling)	918 447
PROFIBUS Y-Connector	902 098
Adapter	
RS232-Adapter with extension cable to connect to PC (Item no. 917039)	654 748
RS485-Adapter	654 538
PC 2m extension cable for RS232, with 9-pin socket/plug	917 039
USB-Adapter	670 639
Communications software MassFlowCommunicator	Download at

Pin Assignment

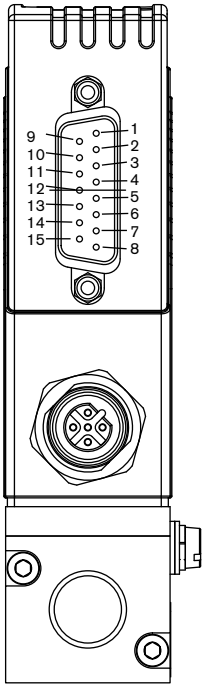

Sub-D 15-pin plug

Pin	Connection
1	Relay - NC contact
2	Relay - NO contact
3	Relay - middle contact
4	GND for 24V supply and binary inputs
5	24V Supply +
6	8V Output (only for internal company use)
7	not configured
8	not configured
9	Actual value output GND
10	Actual value output +
11	DGND (for RS232)
12	Binary input 1
13	Binary input 2
14	RS232 RxD (without driver)
15	RS232 RxD (without driver)

Fieldbus version

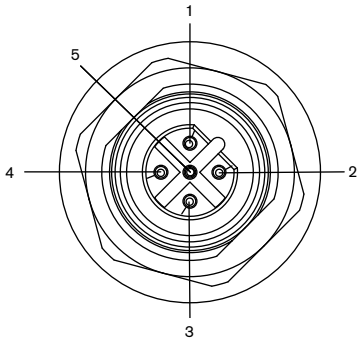

PROFIBUS DP - M12 socket , B-coded (DPV1 max. 12 MBaud)

Pin	Connection
1	VDD
2	RxD/ TxD – N (A-circuit)
3	DGND
4	RxD/ TxD – P (B-circuit)
5	not configured

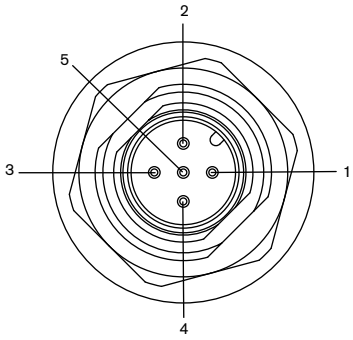

CANopen resp., DeviceNet - M12 Plug

Pin	Connection
1	Shield
2	not configured
3	DGND
4	CAN_H
5	CAN_L

Dimensions [mm]

Standard Version

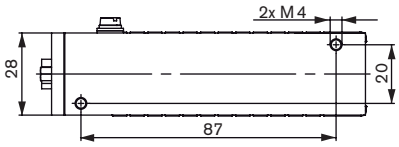

Size A	
G 1/8	G 1/4
NPT 1/8	NPT 1/4

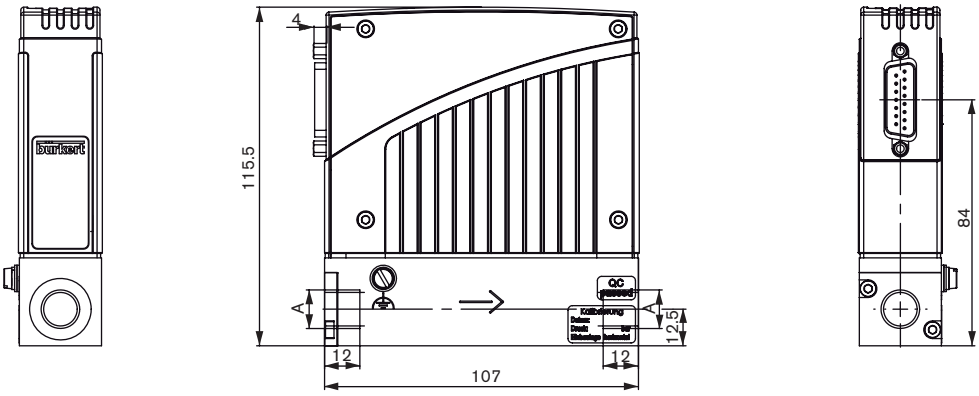

Sub-base Version

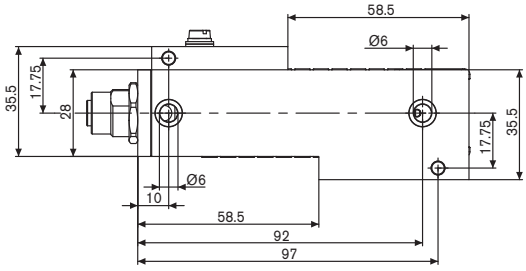

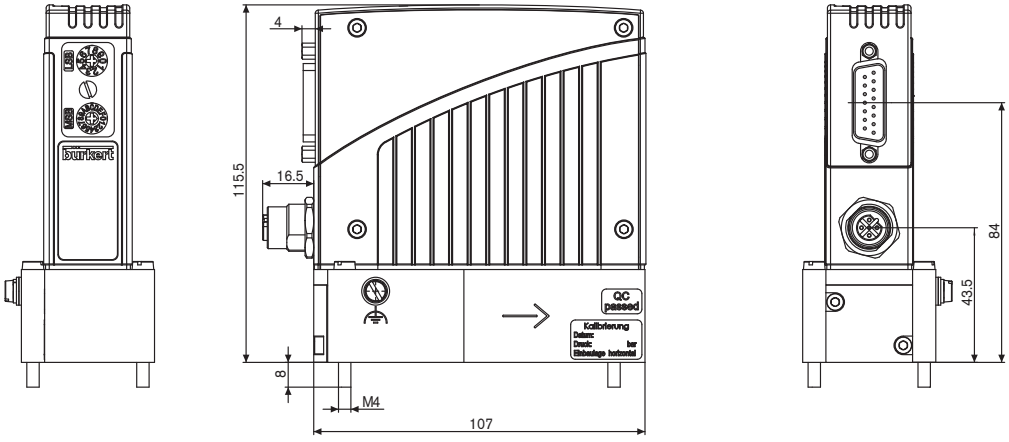

In devices without fieldbus communication there is no electrical M12 connector in the upper housing part.

bürkert

Note
You can fill out the fields directly in the PDF file before printing out the form.

LFC/LFM applications - Request for quotation

Please fill out and send to your nearest Bürkert facility with your inquiry or order

Company	Contact person
Customer no.	Department
Street	Tel./Fax
Postcode/Town	E-Mail

☐ **LFC applications** ☐ **LFM applications** ☐ **Quantity** ☐ **Required delivery date**

Medium data

Fluids				
Density [kg/m³]			at 20°C ☐	at 40°C ☐
Viscosity [cSt]	at 5°C ☐		at 20°C ☐	at 40°C ☐
Medium temperature [°C or °F]	☐ °C		☐ °F	
Abrasive components/solid particles	☐ no		☐ yes, as follows: ☐	

Fluidic data

Maximum flow Q_{nom}		☐ l/h	☐ l/min	
		☐ kg/h	☐ kg/min	
		☐ ml/h	☐ ml/min	
Minimum flow Q_{min}		☐ l/h	☐ l/min	
		☐ kg/h	☐ kg/min	
		☐ ml/h	☐ ml/min	
Inlet pressure at Q_{nom}	p_1=	☐ barg ■		
Outlet pressure at Q_{nom}	p_2=	☐ barg ■		
Max. inlet pressure p_{1max}		☐ barg ■		
Pipeline (external-Ø)		☐ mm	☐ inch	
LFC/LFM Port connection		☐ without screw-in fitting		
		☐ 1/8 G-thread	☐ 1/4 G-thread (DIN ISO 228/1)	
		☐ 1/8 NPT-thread	☐ 1/4 NPT-thread (ANSI B1.2)	
		☐ with screw-in fitting		
		☐ Sub-base		
Installation of LFC/LFM		☐ horizontal, valve upright (standard)	☐ horizontal, valve to the side	
Ambient temperature		☐ vertical, flow upwards	☐ vertical, flow downwards	
		☐ °C		

Material data

Body material	☐ Stainless steel		
Seal material	☐ FKM	☐ EPDM	☐ Other: _____

Electrical data

Output Signal	**with standard signal**	**with fieldbus**
	☐ 0-5 V	☐ PROFIBUS DP
	☐ 0-10 V	☐ DeviceNet
	☐ 0-20 mA	☐ CANopen
	☐ 4-20 mA	

■ Please quote all pressure values as overpressure with respect to atmospheric pressure [barg]

Reset

To find your nearest Bürkert facility, click on the orange box →

In case of special application conditions, please consult for advice

Subject to alterations.
© Christian Bürkert GmbH & Co. KG

0910/2_EU-en_00895111

bürkert
FLUID CONTROL SYSTEMS

LFM Liquid Flow Meter

- High dynamic flow measurement
- Applicable for liquid flow measurement up to 600 ml/min (36 l/h)
- No moving parts in medium
- Fieldbus optional

Type 8709 can be combined with…

Type 1150
Multi-channel program controller

Type 6606
2/2-way Solenoid Valve

Type 6011
2/2-way Solenoid Valve

MassFlowCommunicator
Communications Software

Type 8709 is an instrument for liquid flow measurement in process technology.

The actual value supplied by the sensor is transmitted through the digital electronics and over a standard signal output or a field bus interface.

In the device two calibration curves can be stored, which the user is able to switch between.

Typical application areas of liquid measurements are:

- Heat treatment,
- Machine tools,
- Fuel cell technology,
- Packaging technology,
- Material coating,
- Bio reactors.

In particular, the Type 8709 meets the requirement of IP65.

Technical data			
Full scale range (Q_{nom})	0.6 to 36 l/h (10 to 600 ml/min) re. water	**Output signal** (actual value)	0-5 V, 0-10 V, 0-20 mA or 4-20 mA
Operating medium	Clean and low viscous liquids	**Max. current** (voltage output)	10 mA
Viscosity	0.4 to 4 cSt	**Max. burden** (current output)	600 Ω
Max. operating pressure (at inlet)	Up to max. 10 barg; typical max. 2 barg	**Alternative output signal**	Digital with fieldbus: ▪ PROFIBUS DP V1 ▪ DeviceNet ▪ CANopen
Calibration medium	Water (conversion to operating medium with correcting function)	**Type of protection**	IP65
Medium temperature	10 to + 40 °C	**Dimensions [mm]** (without compression fittings)	115 x 137.5 x 37 (BxHxT)
Ambient temperature	0 to + 55 °C	**Total weight**	ca. 1100 g
Accuracy	±1.5 % o.R. ±0.5 % F.S.	**Installation**	Horizontal or vertical
Repeatability	±0.5 % F.S.	**Light emitting diodes** (Default function, other functions programmable)	Indication for: 1. Power 2. Communication 3. Limit 4. Error
Turn-down ratio	1:10	**Binary inputs** (Default function, other functions programmable)	Three: 1. not assigned 2. not assigned 3. not assigned
Response time ($t_{95\%}$)	< 500 ms	**Binary outputs** (Default function, other functions programmable)	Two relay outputs for: 1. Limit (Q_{nom} almost reached) 2. Error (e.g. sensor failure) Capacity: max. 60 V, 1 A, 60 VA
Body material	Stainless steel		
Housing	PBT		
Sealing material	FKM, EPDM, FFKM		
Port connection	G1/8, NPT 1/8, G1/4, NPT 1/4		
Electrical Connection	Round socket, 8-pin, Sub-HD socket, 15-pin, M12 plug or socket, 5-pin (with fieldbus)		
Operating voltage	24 V DC ± 10 %		
Residual ripple	< 2 %		
Power consumption	Max. 2.5 W (5 W with fieldbus version)		

Measurement principle

The sensor measures the flow by means of differential pressure. An orifice in the main channel causes pressure loss at liquid flow which is measured by the differential pressure sensor. The sensor feedbacks a precise and temperature compensated signal from which the electronics calculate the corresponding flow.

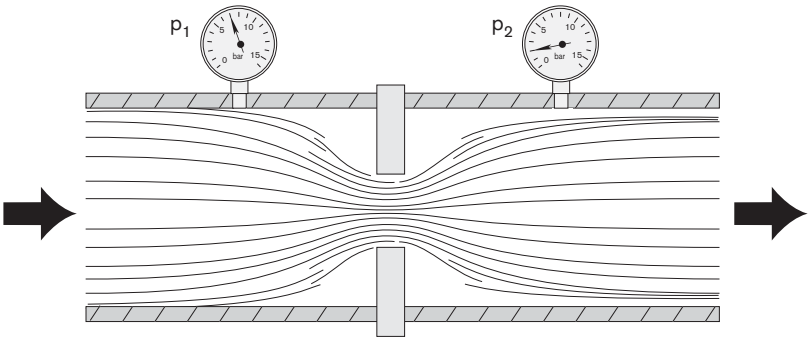

To avoid a blockage of the aperture by contaminated mediums an upstream filter is recommended.

Notes regarding the selection of the unit

The decisive factors for the perfect functioning of an LFM within the application are the fluid compatibility, the pressure range and the correct choice of the flow meter range. The pressure loss over the LFM averages in typical applications approx. 500 mbar, with up to 2 barg inlet pressure.

The specification of the inlet pressure, p_{1max}, which can be expected is necessary for the selection of the suitable differential pressure sensor.

The request form on page 5 contains the relevant fluid specification. Please use the experience of Bürkert engineers already in the design phase and provide us with a copy of your request containing the necessary data together with your inquiry or order.

Ordering chart for accessories (Connectors are not included in the delivery)

Article	Item no.
Electrical connection	
Round 8-pin binder plug (solder connection)	918 299
Round 8-pin plug with prefabricated 5m cable on one side	787 733
Round 8-pin plug with prefabricated 10m cable on one side	787 734
Sub-D 15-pin plug with prefabricated 5m cable on one side	787 735
Sub-D 15-pin plug with prefabricated 10m cable on one side	787 736
PROFIBUS DP	
M12 plug	918 198
M12 socket (coupling)	918 447
PROFIBUS Y-Connector	902 098
Adapter	
RS232-Adapter with extension cable to connect to PC (Item no. 917039)	654 757
RS485-Adapter	658 499
PC 2m extension cable for RS232, with 9-pin socket/plug	917 039
USB-Adapter	670 696
Communications software MassFlowCommunicator	Download at

Pin Assignment

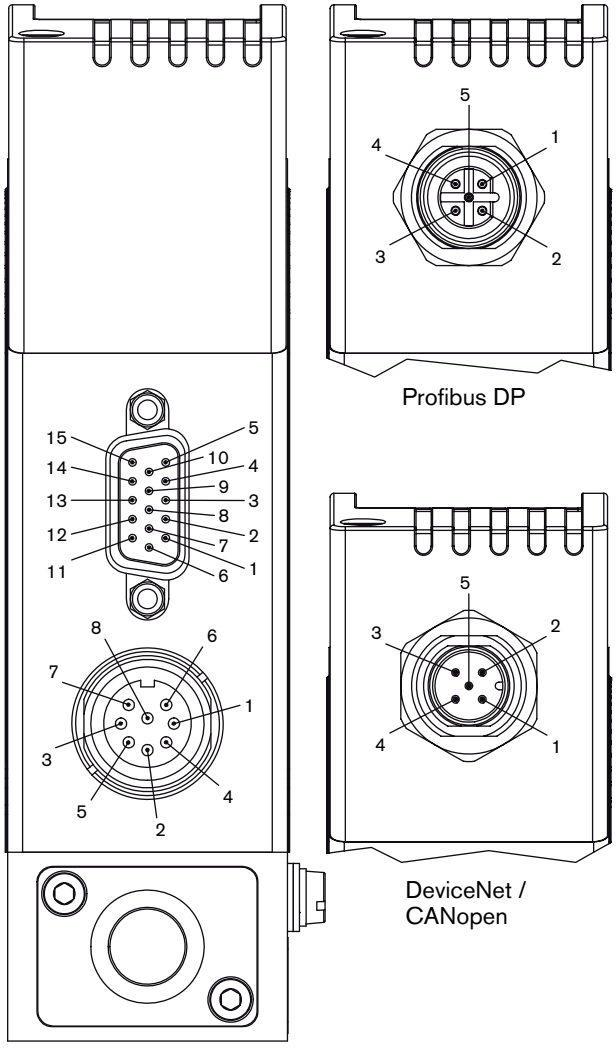

Fieldbus version

PROFIBUS DP - M12 socket , B-coded (DPV1 max. 12 MBaud)

Pin	Connection
1	VDD
2	RxD/ TxD – N (A-circuit)
3	DGND
4	RxD/ TxD – P (B-circuit)
5	not configured

CANopen resp., DeviceNet - M12 Plug

Pin	Connection
1	Shield
2	not configured
3	DGND
4	CAN_H
5	CAN_L

Sub-HD socket, 15-pin

Pin	Connection
1	not configured
2	not configured
3	Actual value output + [1]
4	Binary input 2
5	12V-Output (only for internal company use)
6	RS232 TxD (direct connection to PC)
7	Binary input 1
8	DGND (for binary input)
9	only for internal company use (do not connect)
10	12V-Output (only for internal company use)
11	12V-Output (only for internal company use)
12	Binary input 3
13	Actual value output GND [1]
14	RS232 RxD (direct connection to PC)
15	DGND (for RS232-interface)

[1] not applicable for fieldbus version

Round socket, 8-pin,

Pin	Connection
1	24V Supply +
2	Relay 1 - middle contact
3	Relay 2 - middle contact
4	Relay 1 - NC contact
5	Relay 1 - NO contact
6	24V-Supply GND
7	Relay 2 - NO contact
8	Relay 2 - NC contact

Dimensions [mm]

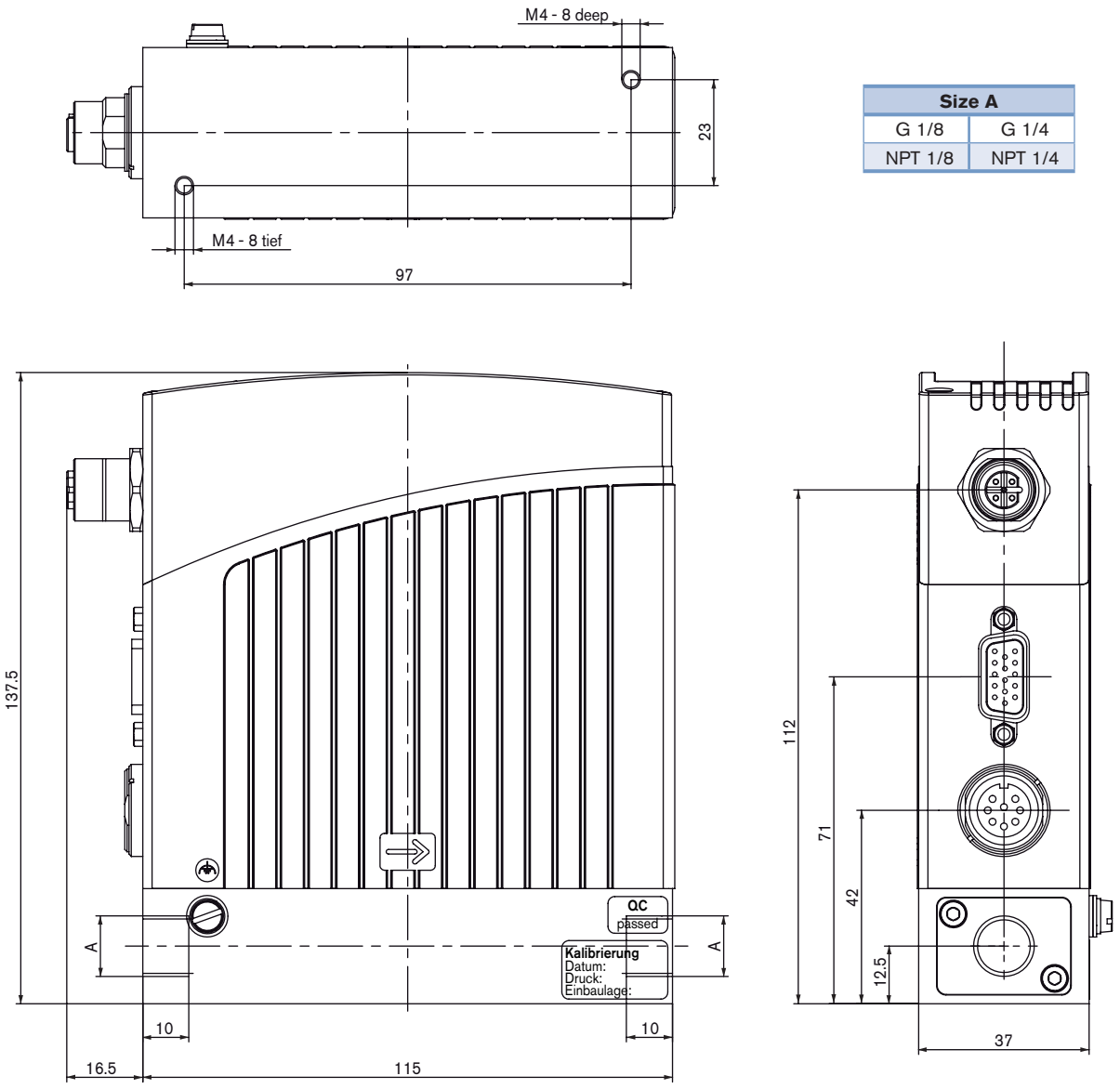

Size A	
G 1/8	G 1/4
NPT 1/8	NPT 1/4

In devices without fieldbus communication there is no electrical M12 connector in the upper housing part.

bürkert

Note
You can fill out the fields directly in the PDF file before printing out the form.

LFC/LFM applications - Request for quotation

Please fill out and send to your nearest Bürkert facility with your inquiry or order

Company	Contact person
Customer no.	Department
Street	Tel./Fax
Postcode/Town	E-Mail

☐ **LFC applications** ☐ **LFM applications** ☐ **Quantity** ☐ **Required delivery date**

Medium data

Fluids				
Density [kg/m³]			at 20°C ☐	at 40°C ☐
Viscosity [cSt]		at 5°C ☐	at 20°C ☐	at 40°C ☐
Medium temperature [°C or °F]		☐ °C	☐ °F	
Abrasive components/solid particles		☐ no	☐ yes, as follows: ☐	

Fluidic data

Maximum flow Q_{nom}	☐ l/h	☐ l/min	
	☐ kg/h	☐ kg/min	
	☐ ml/h	☐ ml/min	
Minimum flow Q_{min}	☐ l/h	☐ l/min	
	☐ kg/h	☐ kg/min	
	☐ ml/h	☐ ml/min	
Inlet pressure at Q_{nom}	p_1= ☐ barg ■		
Outlet pressure at Q_{nom}	p_2= ☐ barg ■		
Max. inlet pressure p_{1max}	☐ barg ■		
Pipeline (external-Ø)	☐ mm	☐ inch	
LFC/LFM Port connection	☐ without screw-in fitting		
	☐ 1/4 G-thread	☐ 1/4 G-thread (DIN ISO 228/1)	
	☐ 1/4 NPT-thread	☐ 1/4 NPT-thread (ANSI B1.2)	
	☐ with screw-in fitting		
Installation of LFC/LFM	☐ horizontal, valve upright (standard)	☐ horizontal, valve to the side	
	☐ vertical, flow upwards	☐ vertical, flow downwards	
Ambient temperature	☐ °C		

Material data

Body material ☐ Stainless steel
Seal material ☐ FKM ☐ EPDM ☐ Other: _____

Electrical data

Output Signal	**with standard signal**	**with fieldbus**
	☐ 0-5 V	☐ PROFIBUS DP
	☐ 0-10 V	☐ DeviceNet
	☐ 0-20 mA	☐ CANopen
	☐ 4-20 mA	

■ Please quote all pressure values as overpressure with respect to atmospheric pressure [barg]

Reset form

To find your nearest Bürkert facility, click on the orange box →

In case of special application conditions, please consult for advice

Subject to alterations.
© Christian Bürkert GmbH & Co. KG

0910/2_EU-en_00895112

bürkert
FLUID CONTROL SYSTEMS

LFC Liquid Flow Controller

- High dynamic control through fast flow measurement
- Applicable for liquid dosing up to 600 ml/min (36 l/h)
- No moving parts in medium
- Fieldbus optional
- Compact version

Type 8718 can be combined with…

Type 1150
Multi-channel program controller

Type 6606
2/2-way Solenoid Valve

Type 6011
2/2-way Solenoid Valve

Type 8718 is an instrument for liquid flow control in process technology.

The measured value provided by the sensor will be compared in the digital control electronics with the predefined set point according to the signal; if a control difference is present, the control value output to the proportional valve will be modified using a PI-control algorithm. In this way, the flow can be maintained at a fixed value or a predefined profile can be followed, regardless of pressure variations or other changes in the system. As a control element, a proportional valve working at low friction guarantees a high sensitivity and the good control characteristics of the unit. MassFlowCommunicator software can be used for parameterisation and diagnosis.

Typical application areas of liquid dosing are:

- Heat treatment
- Machine tools
- Fuel cell technology
- Packaging technology,
- Material coating,
- Bio reactors.

The device offers a particularly compact solution.

Technical data	
Full scale range (Q_{nom})	0.9 to 36 l/h (15 to 600 ml/min) re. water
Operating medium	Clean and low viscous liquids
Viscosity	0.4 to 4 cSt
Max. operating pressure (at inlet)	Measurement range : up to max. 10 barg; typical max. 2 barg
Calibration medium	Water (conversion to operating medium with correcting function)
Medium temperature	10 to + 40 °C
Ambient temperature	0 to + 55 °C
Accuracy	±1.5 % o.R. ±0.5 % F.S.
Repeatability	±0.5 % F.S.
Turn-down ratio	1:10
Settling time($t_{95\%}$)	< 500 ms
Body material	Stainless steel
Housing	PC (Polycarbonate)
Sealing material	FKM, EPDM, FFKM
Port connection	G 1/8, NPT 1/8, G 1/4, NPT 1/4, sub-base
Control valve Valve orifices	Proportional valve; normally close; depending on flow range and pressure
Electrical Connection	Sub-D 15-pin plug M12 (PROFIBUS) 5-pin socket M12 (DeviceNet, CANopen) 5-pin plug
Operating voltage	24 V DC ± 10 %
Residual ripple	< 2 %
Power consumption	Max. 7.5 W (10 W with fieldbus version)

Input signal (set point)	0-5 V, 0-10 V, 0-20 mA *or* 4-20 mA
Input impedence	>20 kΩ (voltage), <300 Ω (current)
Output signal (actual value)	0-5 V, 0-10 V, 0-20 mA *or* 4-20 mA
Max. current voltage output	10 mA
Max. burden current output	600 Ω
Alternative input and output signal	Digital with fieldbus: ▪ PROFIBUS DP V1 ▪ DeviceNet ▪ CANopen
Type of protection	IP40
Dimensions [mm] (without compression fittings)	Standard version: 107 x 115.5 x 28 (BxHxT) Sub-base version: 107 x 115.5 x 43 (BxHxT)
Total weight	Approx. 1000 g
Installation	Horizontal or vertical
Light emitting diodes (Default functions, other functions programmable)	Indication for: 1. Power 2. Communication (only in fieldbus version) Limit (only in analogue version) 3. Error
Binary inputs (Default functions, other functions programmable)	Two: 1. Start Autotune 2. Open valve (for purging)
Binary output (Default functions, other functions programmable)	A relay output for: 1. Limit (desired value can not be achieved) Capacity: max. 25 V, 1 A, 25 VA

Measurement principle

The sensor measures the flow by means of differential pressure. An orifice in the main channel causes pressure loss at liquid flow which is measured by the differential pressure sensor. The sensor feedbacks a precise and temperature compensated signal out of which the electronics calculates the corresponding flow.

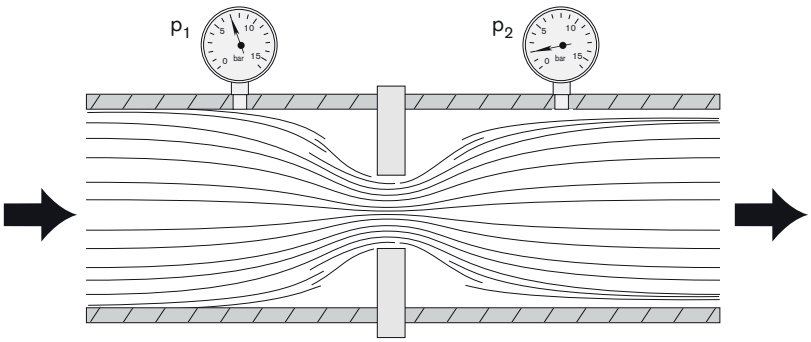

To avoid a blockage of the aperture by contaminated mediums an upstream filter is recommended.

Notes regarding the selection of the unit

For the proper choice of the actuator orifice and differential pressure sensor within the LFC, not only is the maximum flow rate Q_{nom} required, but also the pressure values directly before and after the LFC (p_1, p_2) at this flow rate Q_{nom} should be known. In general, these pressures are not the same as the overall inlet and outlet pressures of the whole plant, because usually there are additional flow resistors (tubing, additional shut-off valves, nozzles etc.) present both before and after the controller. Please use the specification sheet (p. 5) to indicate the pressures directly before and after the LFC. If these should be unknown or not accessible to a measurement, estimates are to be made by taking into account the approximate pressure drops over the flow resistors before and after the LFC, respectively, at a flow rate of Q_{nom}.

In addition, please quote the maximum inlet pressure p_{1max} to be encountered. This data is needed to make sure the actuator is able to provide a close-tight function within all the specified modes of operation. The knowledge of the maximum inlet pressure is also necessary to select an adequate differential pressure sensor

The request form on page 6 contains the relevant fluid specification. Please use the experience of Bürkert engineers already in the design phase and provide us with a copy of your request containing the necessary data together with your inquiry or order.

Ordering Chart for Accessories

Article	Item No.	
Connections/Cables		
Socket D-Sub 15-pin solder connection	918 274	
Hood for D-Sub socket, with screw locking	918 408	
Socket D-Sub 15-pin with 5m cable	787 737	
Socket D-Sub 15-pin with 10m cable	787 738	
Adapters [3]		
RS232 adapter	654 748	
PC extension cable for RS232 9-pin socket/plug 2 m	917 039	
RS422 adapter (RS485 compatible)	666 371	
USB adapter (Version 1.1, USB socket type B)	670 639	
USB connection cable 2 m	772 299	
Communication software MassFlowCommunicator		
Accessories for Fieldbus	**PROFIBUS DP (B-coded)**	**DeviceNet, CANopen (A-coded)**
Plug M12 [4]	918 198	917 115
Socket M12 (coupling) [4]	918 447	917 116
Y-junction [4]	902 098	788 643
Shut-off resistor	902 553	(on request)
GSD-File (PROFIBUS), EDS-File (DeviceNet, CANopen)	Download from	

[3] The adapters serve mainly for initial operation or diagnosis. Those are not obligatory for continuous operation.

[4] The two M12 connectors as listed above cannot be used together on the same side of the Y-junction. At least one of the two M12 connection needs to be a prefabricated cable which uses typically a thinner connector.

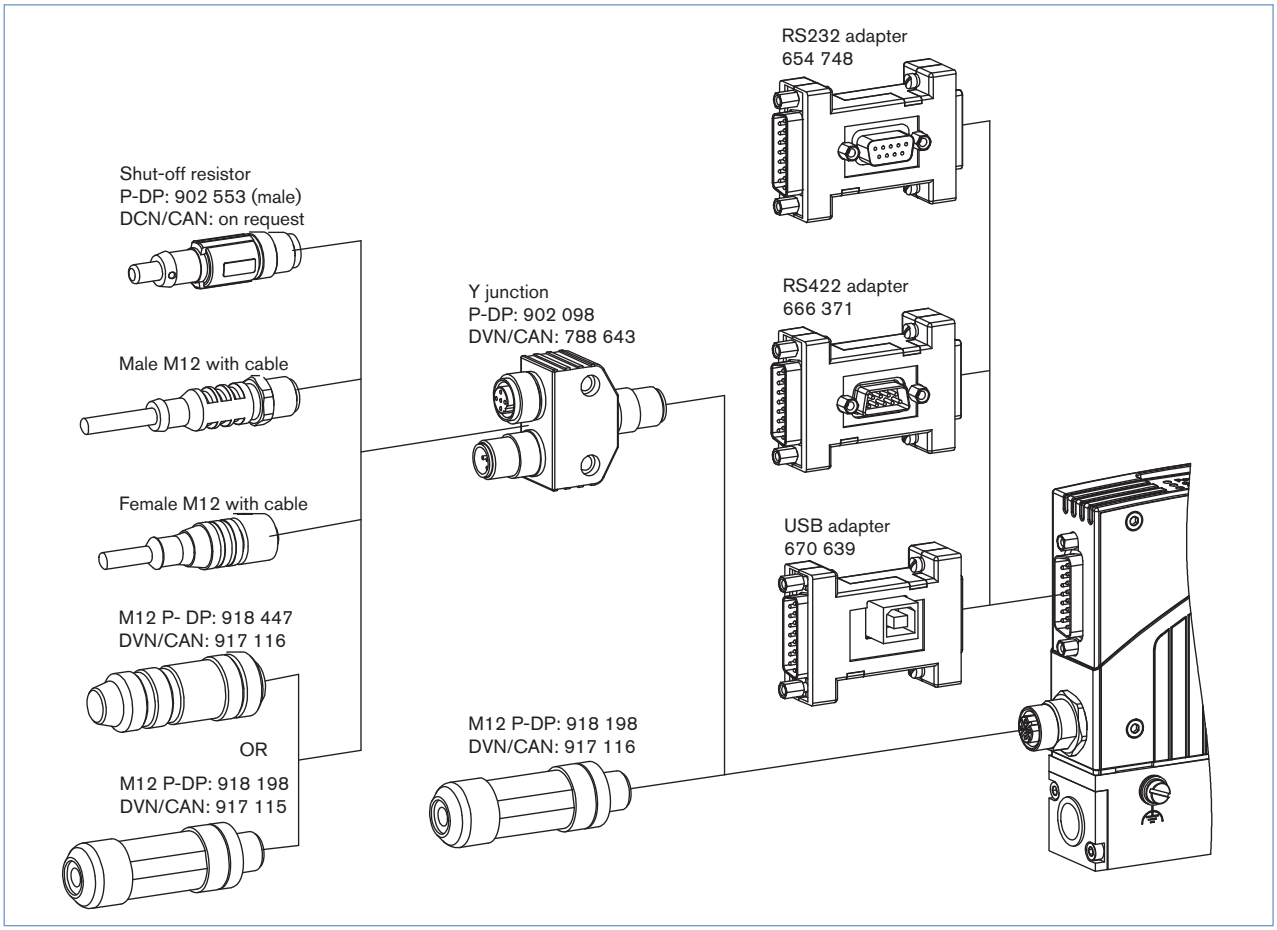

Pin Assignment

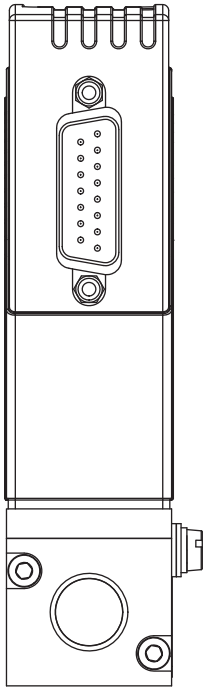

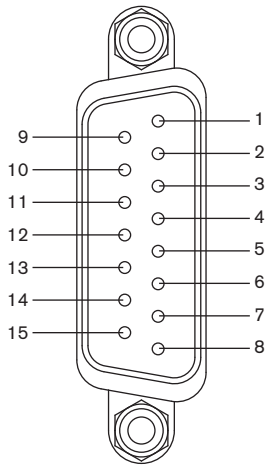

Plug D-Sub, 15-pin	Pin	Assignment	
		Analogue Control	Bus control
	1	Relay – normally closed	
	2	Relay – normally opened	
	3	Relay – middle contact	
	4	GND for 24V-Supply and Binary inputs	
	5	24V-Supply +	
	6	12V-Output (only for internal company use)	
	7	Set value input GND	N.C. [5]
	8	Set value input +	N.C.
	9	Actual value output GND	N.C.
	10	Actual value output +	N.C.
	11	DGND (for RS232) [6]	
	12	Binary input 1	
	13	Binary input 2	
	14	RS232 RxD (without driver) [6]	
	15	RS232 TxD (without driver) [6]	

[5] N.C.: not connected (not used)
Note:
– Optional Pin 7 and 8 with bus version as transmitter input possible
– The cable length for RS232/ Setpoint and actual value signal is limited to 30 meters.
[6] Driving RS232 interface only by RS232 adapter including an adaption of TTL levels

With Fieldbus Version:

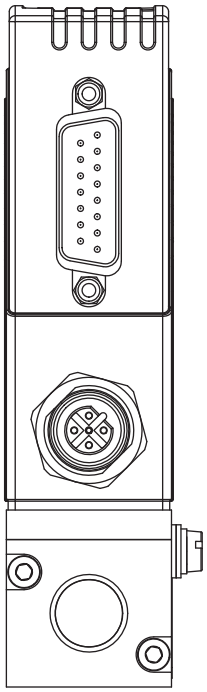

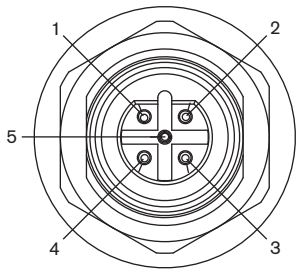

PROFIBUS DP – socket B-coded M12 (DPV1 max. 12 MBaud)	Pin	Assignment
	1	VDD (only for termination resistor)
	2	RxD/ TxD – N (A-Line)
	3	DGND
	4	RxD/ TxD – P (B-Line)
	5	C (4)

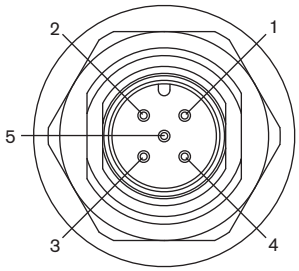

DeviceNet, CANopen – Plug M12	Pin	Assignment
	1	Shield
	2	N.C. [7]
	3	DGND
	4	CAN_H
	5	CAN_L

Dimensions [mm]

Standard Version

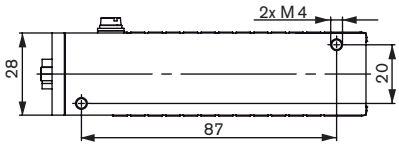

Size A	
G 1/8	G 1/4
NPT 1/8	NPT 1/4

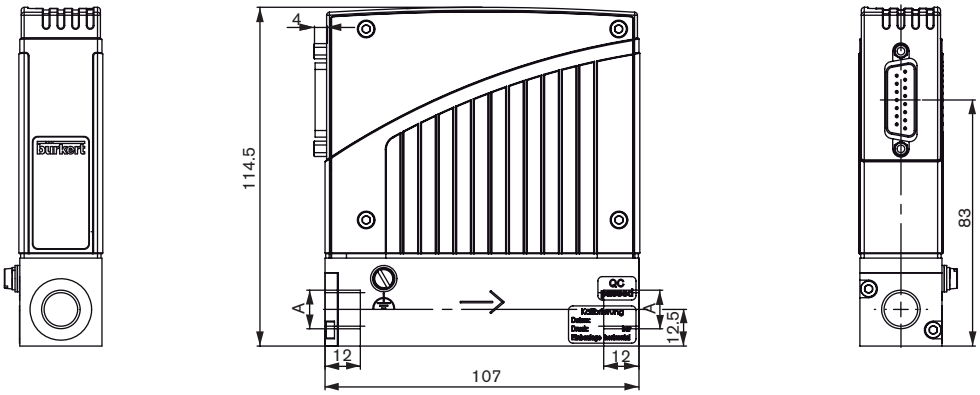

Sub-base Version

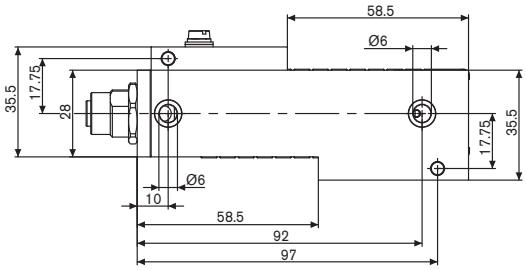

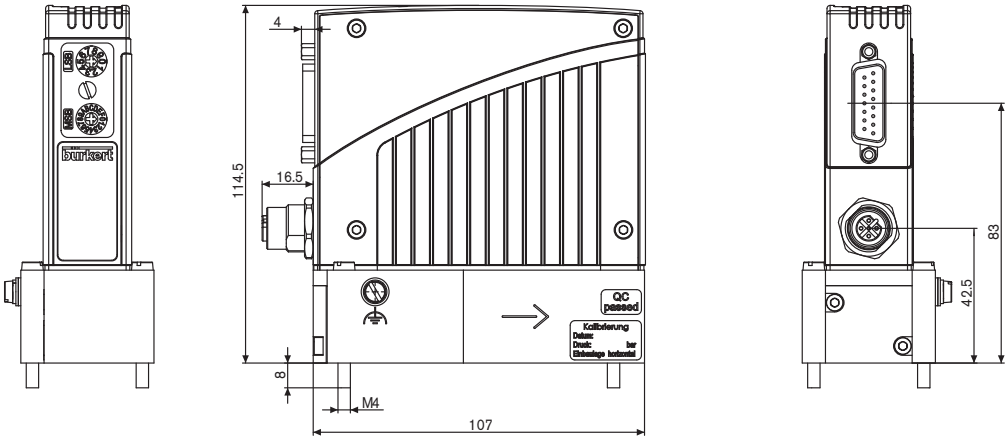

In devices without fieldbus communication there is no electrical M12 connector in the upper housing part.

bürkert

Note
You can fill out the fields directly in the PDF file before printing out the form.

LFC/LFM applications - Request for quotation

Please fill out and send to your nearest Bürkert facility with your inquiry or order

Company	Contact person
Customer no.	Department
Street	Tel./Fax
Postcode/Town	E-Mail

☐ **LFC applications** ☐ **LFM applications** ☐ **Quantity** ☐ **Required delivery date**

Medium data

Fluids				
Density [kg/m³]			at 20°C ☐	at 40°C ☐
Viscosity [cSt]	at 5°C ☐		at 20°C ☐	at 40°C ☐
Medium temperature [°C or °F]	☐ °C		☐ °F	
Abrasive components/solid particles	☐ no		☐ yes, as follows: ☐	

Fluidic data

Maximum flow Q_{nom}		☐ l/h	☐ l/min	
		☐ kg/h	☐ kg/min	
		☐ ml/h	☐ ml/min	
Minimum flow Q_{min}		☐ l/h	☐ l/min	
		☐ kg/h	☐ kg/min	
		☐ ml/h	☐ ml/min	
Inlet pressure at Q_{nom}	p_1=	☐ barg ■		
Outlet pressure at Q_{nom}	p_2=	☐ barg ■		
Max. inlet pressure p_{1max}		☐ barg ■		
Pipeline (external-Ø)		☐ mm	☐ inch	
LFC/LFM Port connection		☐ without screw-in fitting		
		☐ 1/8 G-thread	☐ 1/4 G-thread (DIN ISO 228/1)	
		☐ 1/8 NPT-thread	☐ 1/4 NPT-thread (ANSI B1.2)	
		☐ with screw-in fitting		
		☐ Sub-base		
Installation of LFC/LFM		☐ horizontal, valve upright (standard)	☐ horizontal, valve to the side	
		☐ vertical, flow upwards	☐ vertical, flow downwards	
Ambient temperature		☐ °C		

Material data

Body material	☐ Stainless steel		
Seal material	☐ FKM	☐ EPDM	☐ Other: _____

Electrical data

Output/Input Signal	**with standard signal**		**with fieldbus**
	Output	Input	
	☐ 0-5 V	☐ 0-5 V	☐ PROFIBUS DP
	☐ 0-10 V	☐ 0-10 V	☐ DeviceNet
	☐ 0-20 mA	☐ 0-20 mA	☐ CANopen
	☐ 4-20 mA	☐ 4-20 mA	

■ Please quote all pressure values as overpressure with respect to atmospheric pressure [barg]

reset

To find your nearest Bürkert facility, click on the orange box →

In case of special application conditions, please consult for advice

Subject to alterations.
© Christian Bürkert GmbH & Co. KG

1501/3_EU-en_00895113

bürkert
FLUID CONTROL SYSTEMS

LFC Liquid Flow Controller

- High dynamic control through fast flow measurement
- Applicable for liquid dosing up to 600 ml/min (36 l/h)
- No moving parts in medium
- Fieldbus optional

Type 8719 can be combined with…

Type 1150
Multi-channel program controller

Type 6606
2/2-way Solenoid Valve

Type 6011
2/2-way Solenoid Valve

Type 8719 is an instrument for liquid flow control in process technology. The measured value provided by the sensor will be compared in the digital control electronics with the predefined set point according to the signal; if a control difference is present, the control value output to the proportional valve will be modified using a PI-control algorithm. In this way, the flow can be maintained at a fixed value or a predefined profile can be followed, regardless of pressure changes or other disturbances in the system.
As a control element, a proportional valve working at low friction guarantees the high sensitivity and good control characteristics of the unit. MassFlowCommunicator software can be used for parameterisation and diagnosis. Typical application areas of liquid dosing are:

- Heat treatment,
- Machine tools,
- Fuel cell technology,
- Packaging technology,
- Material coating,
- Bio reactors.

In particular, the Type 8719 meets the requirement of IP65.

Technical data	
Full scale range (Q_{nom})	0.9 to 36 l/h (15 to 600 ml/min) re. water
Operating medium	Clean and low viscous liquids
Viscosity	0.4 to 4 cSt
Max. operating pressure (at inlet)	Measurement range: up to max. 10 barg; typical max. 2 barg
Calibration medium	Water (conversion to operating medium with correcting function)
Medium temperature	10 to + 40 °C
Ambient temperature	0 to + 55 °C
Accuracy	±1.5 % o.R. ±0.5 % F.S.
Repeatability	±0.5 % F.S.
Turn-down ratio	1:10
Settling time($t_{95\%}$)	< 500 ms
Body material	Stainless steel
Housing	PBT
Sealing material	FKM, EPDM, FFKM
Port connection	G 1/8, NPT 1/8, G 1/4, NPT 1/4
Control valve Valve orifices	Proportional valve; normally closed; depending on flow range and pressure
Electrical Connection	Round socket, 8-pin, Sub-HD socket, 15-pin, M12 plug or socket, 5-pin (with fieldbus)
Operating voltage	24 V DC ± 10 %
Residual ripple	< 2 %
Power consumption	Max. 7.5 W (10 W with fieldbus version)
Input signal (set point)	0-5 V, 0-10 V, 0-20 mA or 4-20 mA
Input impedance	>20 kΩ (voltage), <300 Ω (current)
Output signal (actual value)	0-5 V, 0-10 V, 0-20 mA or 4-20 mA
Max. voltage current output	10 mA
Max. burden current output	600 Ω
Alternative Input and output signal	Digital with fieldbus: ▪ PROFIBUS DP ▪ DeviceNet ▪ CANopen
Protection class	IP65
Dimensions [mm] (without compression fittings)	115 x 137.5 x 37 (WxHxD)
Total weight	Approx. 1200 g
Mounting position	Horizontal or vertical
Light emitting diodes (default functions, other functions programmable)	Indication for: 1. Power 2. Communication 3. Limit 4. Error
Binary inputs (default functions, other functions programmable)	Three: 1. Start Autotune 2. Open valve (for purging) 3. Not assigned
Binary outputs (default functions, other functions programmable)	Two relay outputs for : 1. Limit (desired value can not be achieved) 2. Error (e.g. sensor failure) Capacity: max. 60 V, 1 A, 60 VA

Measurement principle

The sensor measures the flow by means of differential pressure. An orifice in the main channel causes pressure loss at liquid flow which is measured by the differential pressure sensor. The sensor feedbacks a precise and temperature compensated signal from which the electronics calculate the corresponding flow.

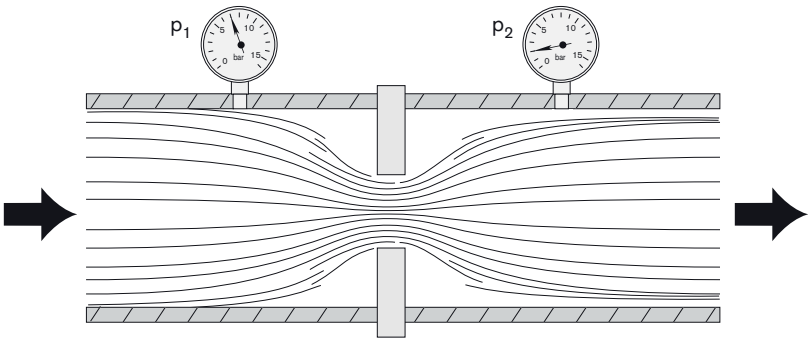

To avoid a blockage of the aperture by contaminated mediums an upstream filter is recommended.

Notes regarding the selection of the unit

For the proper choice of the actuator orifice and differential pressure sensor within the LFC, not only is the maximum flow rate Q_{nom} required, but also the pressure values directly before and after the LFC (p_1, p_2) at this flow rate Q_{nom} should be known. In general, these pressures are not the same as the overall inlet and outlet pressures of the whole plant, because usually there are additional flow resistors (tubing, additional shut-off valves, nozzles etc.) present both before and after the controller. Please use the specification sheet (p. 5) to indicate the pressures directly before and after the LFC. If these should be unknown or not accessible to a measurement, estimates are to be made by taking into account the approximate pressure drops over the flow resistors before and after the LFC, respectively, at a flow rate of Q_{nom}.

In addition, please quote the maximum inlet pressure p_{1max} to be encountered. This data is needed to make sure the actuator is able to provide a close-tight function within all the specified modes of operation. The knowledge of the maximum inlet pressure is also necessary to select an adequate differential pressure sensor

The request form on page 7 contains the relevant fluid specification. Please use the experience of Bürkert engineers already in the design phase and provide us with a copy of your request containing the necessary data together with your inquiry or order.

Ordering chart for accessories

Article	Item no.	
Electrical. Connection		
Round 8-pin binder plug (solder connection)	918 299	
Round 8-pin plug with prefabricated 5m cable on one side	787 733	
Round 8-pin plug with prefabricated 10m cable on one side	787 734	
SUB-HD 15-pin plug with prefabricated 5m cable on one side	787 735	
SUB-HD 15-pin plug with prefabricated 10m cable on one side	787 736	
Adapters [3]		
RS232 adapter for connection to a computer, connection with an extension cable (item no. 917039)	654 757	
PC extension cable for RS232 9-pin socket/plug 2 m	917 039	
RS422 adapter (RS485 compatible)	666 370	
USB adapter	670 696	
USB connection cable 2 m	772 299	
Adapter for manual bus adresse settings (instad of SW)	667 525	
Communication software MassFlowCommunicator	Download from	
Accessories for Fieldbus	**PROFIBUS DP (B-coded)**	**DeviceNet/ CANopen (A-coded)**
Plug M12 [4]	918 198	917 115
Socket M12 (coupling) [4]	918 447	917 116
Y-junction [4]	902 098	788 643
T-junction	918 531	(on request)
Shut-off resistor	902 553	(on request)
GSD-File (PROFIBUS), EDS-File (DeviceNet, CANopen)		

[3] The adapters serve mainly for initial operation or diagnosis. Those are not obligatory for continuous operation.
[4] The two M12 connectors as listed above cannot be used together on the same side of the Y-junction. At least one of the two M12 connection needs to be a prefabricated cable which uses typically a thinner connector.

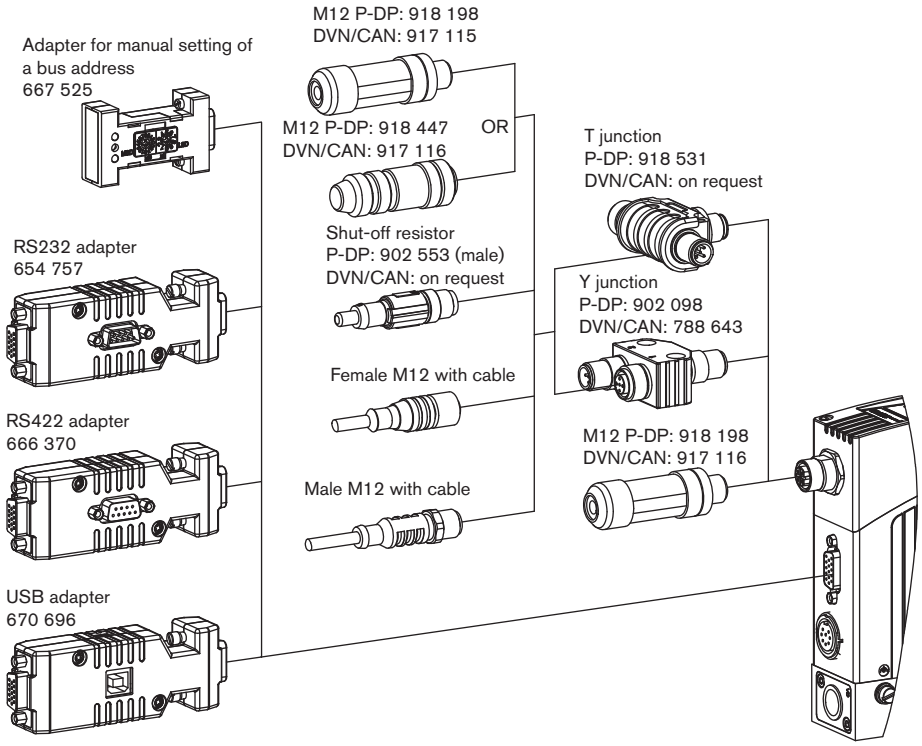

Pin Assignment

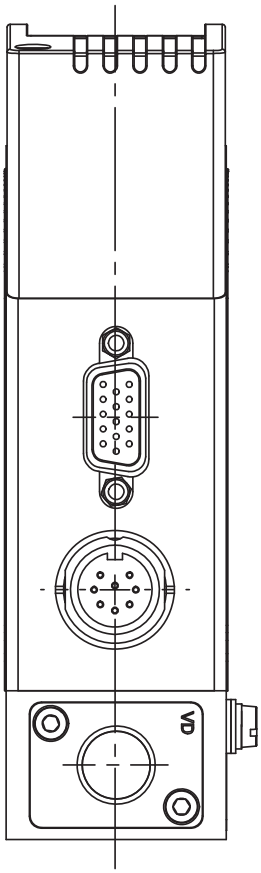

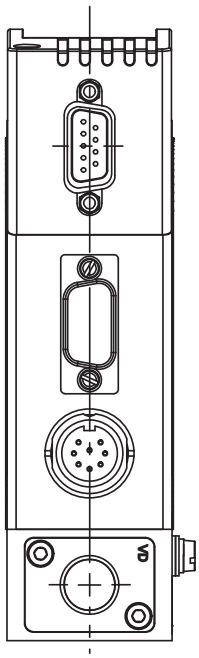

Socket D-Sub HD15

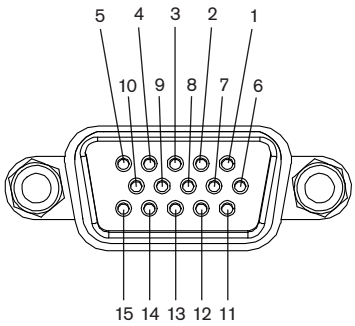

Pin	Assignment	
	Analogue Control	**Bus control**
1	Set value input +	N.C.[5]
2	Set value input GND	N.C.
3	Actual value output +	N.C.
4	Binary input 2	
5	12V-Output (only for internal company use)	
6	RS232 TxD (direct connection to computer)	
7	Binary input 1	
8	GND (for binary inputs)	
9	only company internal use (do not connect!)	
10	12V-Output (only for internal company use)	
11	12V-Output (only for internal company use)	
12	Binary input 3	
13	Actual value output GND	N.C.
14	RS232 RxD direct connection to computer)	
15	DGND (for RS232-interface)	

[5] N.C.: not connected (not used)

Note:
- Optional Pin 1 and 2 with bus version as transmitter input possible
- The cable length for RS232/ Setpoint and flow value signal is limited to 30 meters.

Socket M16, round, 8-pin

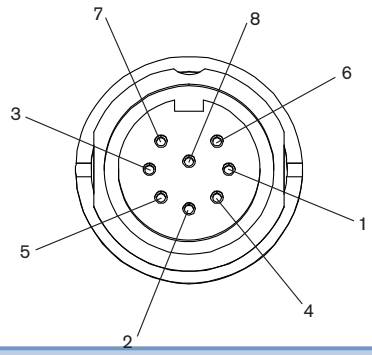

Pin	Assignment
1	24V-Supply +
2	Relay 1 – reference contact
3	Relay 2 – reference contact
4	Relay 1 – normally closed
5	Relay 1 – normally opened
6	24V-Supply GND
7	Relay 2 – normally opened
8	Relay 2 – normally closed

Socket D-Sub 9-pin
(only with fieldbus version)

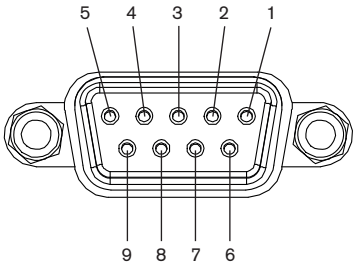

Pin	Assignment	
	PROFIBUS DP	**DeviceNet/ CANopen**
1	Shield	Shield
2	N.C.	CAN-L data line
3	RxD/TxD - P (B-line)	GND
4	RTS (control signal for repeater)	N.C.
5	GND	N.C.
6	VDD (only for termination resistor)	N.C.
7	N.C.	CAN-H data line
8	RxD/TxD - N (A-line)	N.C.
9	N.C.	N.C.

Pin Assignment *(continued)*

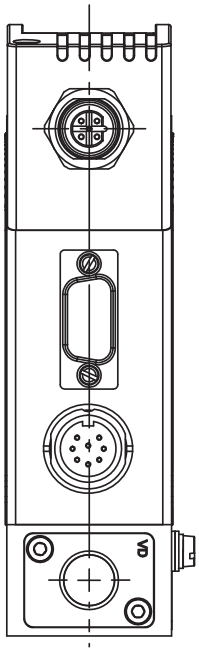

PROFIBUS DP – socket B-coded M12 (DPV1 max. 12 Mbaud)	Pin	Assignment
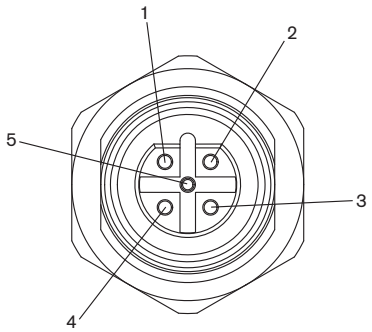	1	VDD (only for termination resistor)
	2	RxD/TxD – N (A-line)
	3	DGND
	4	RxD/TxD – P (B-line)
	5	N.C.

DeviceNet/ CANopen – Plug A-coded M12	Pin	Assignment
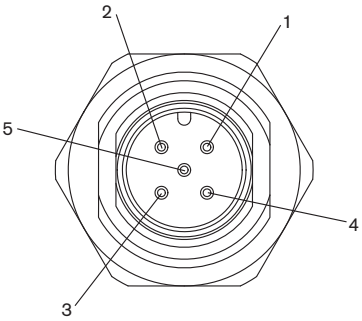	1	Shield
	2	N.C. [7]
	3	DGND
	4	CAN_H
	5	CAN_L

[6] Optional configuration with 24V DC possible for power supply via fieldbus connector. With this no power supply connection on round M16 plug needed.

Dimensions [mm]

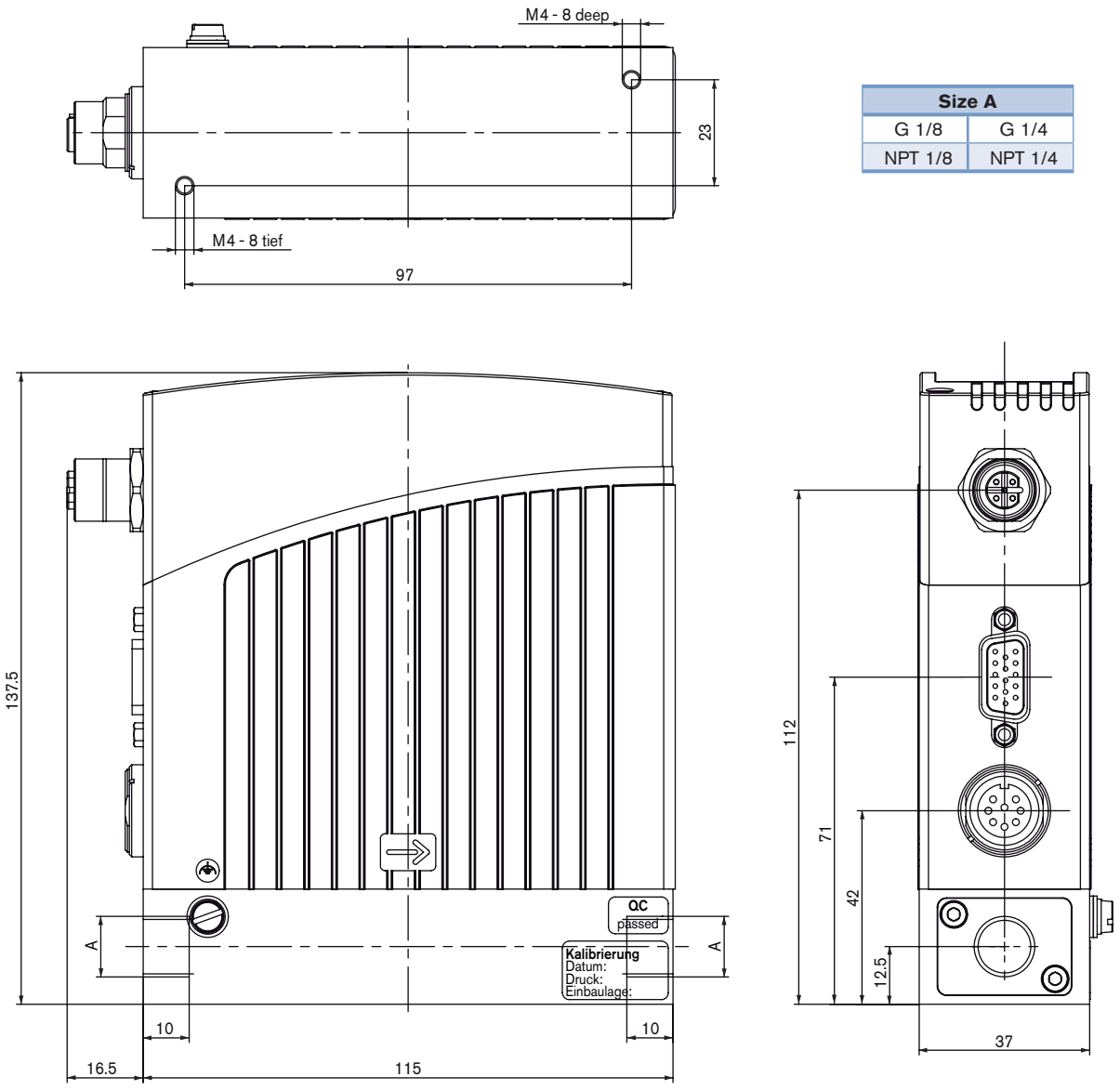

Size A	
G 1/8	G 1/4
NPT 1/8	NPT 1/4

In devices without fieldbus communication there is no electrical M12 connector in the upper housing part

bürkert

Note
You can fill out the fields directly in the PDF file before printing out the form.

LFC/LFM applications - Request for quotation

Please fill out and send to your nearest Bürkert facility with your inquiry or order

Company	Contact person
Customer no.	Department
Street	Tel./Fax
Postcode/Town	E-Mail

☐ **LFC applications** ☐ **LFM applications** ☐ **Quantity** ☐ **Required delivery date**

Medium data

Fluids				
Density [kg/m³]			at 20°C ☐	at 40°C ☐
Viscosity at 5°C [cSt]	at 5°C ☐		at 20°C ☐	at 40°C ☐
Medium temperature [°C or °F]	☐ °C		☐ °F	
Abrasive components/solid particles	☐ no		☐ yes, as follows: ☐	

Fluidic data

Maximum flow Q_{nom}	☐ l/h	☐ l/min	
	☐ kg/h	☐ kg/min	
	☐ ml/h	☐ ml/min	
Minimum flow Q_{min}	☐ l/h	☐ l/min	
	☐ kg/h	☐ kg/min	
	☐ ml/h	☐ ml/min	
Inlet pressure at Q_{nom}	p_1= ☐ barg ■		
Outlet pressure at Q_{nom}	p_2= ☐ barg ■		
Max. inlet pressure p_{1max}	☐ barg ■		
Pipeline (external-Ø)	☐ mm	☐ inch	
LFC/LFM port connection	☐ without screw-in fitting		
	☐ 1/8 G-thread	☐ 1/4 G-thread (DIN ISO 228/1)	
	☐ 1/8 NPT-thread	☐ 1/4 NPT-thread (ANSI B1.2)	
	☐ with screw-in fitting		
Installation of LFC/LFM	☐ horizontal, valve upright (standard)	☐ horizontal, valve to the side	
	☐ vertical, flow upwards	☐ vertical, flow downwards	
Ambient temperature	☐ °C		

Material data

Body material	☐ Stainless steel		
Seal material	☐ FKM	☐ EPDM	☐ Other: _____

Electrical data

Output/Input Signal	**with standard signal**		**with fieldbus**
	Output	Input	
	☐ 0-5 V	☐ 0-5 V	☐ PROFIBUS-DP
	☐ 0-10 V	☐ 0-10 V	☐ DeviceNet
	☐ 0-20 mA	☐ 0-20 mA	☐ CANopen
	☐ 4-20 mA	☐ 4-20 mA	

■ Please quote all pressure values as overpressure with respect to atmospheric pressure [barg]

reset

To find your nearest Bürkert facility, click on the orange box →

In case of special application conditions, please consult for advice

Subject to alterations.
© Christian Bürkert GmbH & Co. KG

1505/4_EU-en_00895114

По вопросам продаж и поддержки обращайтесь:

Архангельск +7 (8182) 45-71-35
Астана +7 (7172) 69-68-15
Астрахань +7 (8512) 99-46-80
Барнаул +7 (3852) 37-96-76
Белгород +7 (4722) 20-58-80
Брянск +7 (4832) 32-17-25
Владивосток +7 (4232) 49-26-85
Владимир +7 (4922) 49-51-33
Волгоград +7 (8442) 45-94-42
Воронеж +7 (4732) 12-26-70
Екатеринбург +7 (343) 302-14-75
Иваново +7 (4932) 70-02-95
Ижевск +7 (3412) 20-90-75
Иркутск +7 (3952) 56-24-09
Йошкар-Ола +7 (8362) 38-66-61
Казань +7 (843) 207-19-05
Калининград +7 (4012) 72-21-36
Калуга +7 (4842) 33-35-03
Кемерово +7 (3842) 21-56-70
Киров +7 (8332) 20-58-70
Краснодар +7 (861) 238-86-59
Красноярск +7 (391) 989-82-67
Курск +7 (4712) 23-80-45
Липецк +7 (4742) 20-01-75
Магнитогорск +7 (3519) 51-02-81
Москва +7 (499) 404-24-72
Мурманск +7 (8152) 65-52-70
Наб.Челны +7 (8552) 91-01-32
Ниж.Новгород +7 (831) 200-34-65
Нижневартовск +7 (3466) 48-22-23
Нижнекамск +7 (8555) 24-47-85
Новороссийск +7 (8617) 30-82-64
Новосибирск +7 (383) 235-95-48
Омск +7 (381) 299-16-70
Орел +7 (4862) 22-23-86
Оренбург +7 (3532) 48-64-35
Пенза +7 (8412) 23-52-98
Первоуральск +7 (3439) 26-01-18
Пермь +7 (342) 233-81-65
Ростов-на-Дону +7 (863) 309-14-65
Рязань +7 (4912) 77-61-95
Самара +7 (846) 219-28-25
Санкт-Петербург +7 (812) 660-57-09
Саранск +7 (8342) 22-95-16
Саратов +7 (845) 239-86-35
Смоленск +7 (4812) 51-55-32
Сочи +7 (862) 279-22-65
Ставрополь +7 (8652) 57-76-63
Сургут +7 (3462) 77-96-35
Сызрань +7 (8464) 33-50-64
Сыктывкар +7 (8212) 28-83-02
Тверь +7 (4822) 39-50-56
Томск +7 (3822) 48-95-05
Тула +7 (4872) 44-05-30
Тюмень +7 (3452) 56-94-75
Ульяновск +7 (8422) 42-51-95
Уфа +7 (347) 258-82-65
Хабаровск +7 (421) 292-95-69
Чебоксары +7 (8352) 28-50-89
Челябинск +7 (351) 277-89-65
Череповец +7 (8202) 49-07-18
Ярославль +7 (4852) 67-02-35

сайт: burkert.pro-solution.ru | эл. почта: btk@pro-solution.ru
телефон: 8 800 511 88 70