bürkert
FLUID CONTROL SYSTEMS

Direct-acting 2/2 or 3/2 way pivoted armature valve

- Direct-acting, media-separated valve with diameter of up to DN5
- Maintenance-free pivoted armature technology
- Vibration-proof, block screwed coil system
- Suitable for aggressive alkaline and acidic solutions
- Service-friendly, robust manual operation
- Explosion proof versions

The 0330 valve is a direct-acting, media-separated pivoted armature valve. It is available in 3/2 and 2/2 way versions. As a 3/2 way version, it can be used as a distributor or mixing valve. Various diaphragm material combinations and methods of operation are available depending on the application. The standard brass housing satisfies all European drinking water requirements. Stainless steel (316), PVDF, and polypropylene housing versions complete the offering. The solenoid coils are moulded with a chemically resistant epoxy. The 0330 is equipped with manual override for commissioning and testing. For reduced energy requirements all coils can be delivered with electronic power reduction or as an impulse version. The switching status can be indicated with position feedback as a binary or NAMUR signal. In combination with a plug in accordance with DIN EN 17301-803 Form A, the valves satisfy protection class IP65/67 – in combination with a stainless steel or plastic housing NEMA 250 Cat. 4X.

Content:

Standard version

Technical data	p. 1
Additional options	p. 4
Dimensions & Pin Assignment	p. 5
Ordering chart	p. 6

Explosion proof version

Technical data	p. 7
Additional options	p. 9
Dimensions & Pin Assignment	p. 10
Ordering chart	p. 11

Technical data	
Available housing materials	Brass Stainless steel (1.4401) PP (Polypropylene) PVDF (Polyvinylfluoride)
Port connection	G ¼; NPT ¼; (RC ¼ and G ⅛ on request)
Seal material	EDPM / FKM / FFKM / NBR
Medium	
for NBR	Neutral medium such as compressed air, town gas, water, hydraulic oil, oils and fats without additives, oxygen
EPDM	Alkalis, acids to medium concentrations, alkaline washing and bleaching lyes
for FKM	Oxydizing acids and substances, hot oils with additives, salt solutions, waste gases, oxygen
for FFKM	aggressive mediums, hot air, hot oils
All Materials - For more exact info. please refer to our chemical resistance chart	
Medium temperature for body material brass or stainless steel	NBR 0 to +80 °C EPDM -30 to +90 °C FKM 0 to +90 °C FFKM +5 to +90 °C
Medium temperature for body material PP or PVDF	NBR 0 to +80 °C EPDM -30 to +80 °C FKM 0 to +80 °C FFKM +5 to +80 °C
Viscosity	Max. 37 mm^2/s
Ambient temperature	max. +55 °C
Voltages	24 V 50 Hz; 110 V 50 Hz; 230 V 50 Hz; 120 V 60 Hz; 240 V 60 Hz; 12 V DC; 24 V DC; (further voltages on request)
Voltage tolerance	±10 %
Duty cycle for brass and stainless steel.	100 %
Duty cycle for PP and PVDF	40 % ED (60 % intermittent operation) in 30min for 8 W version 100 % ED for 5 W version

continued

По вопросам продаж и поддержки обращайтесь:

Архангельск +7 (8182) 45-71-35
Астрахань +7 (8512) 99-46-80
Барнаул +7 (3852) 37-96-76
Белгород +7 (4722) 20-58-80
Брянск +7 (4832) 32-17-25
Владивосток +7 (4232) 49-26-85
Волгоград +7 (8442) 45-94-42
Екатеринбург +7 (343) 302-14-75
Ижевск +7 (3412) 20-90-75
Казань +7 (843) 207-19-05
Калуга +7 (4842) 33-35-03
Кемерово +7 (3842) 21-56-70
Киров +7 (8332) 20-58-70
Краснодар +7 (861) 238-86-59
Красноярск +7 (391) 989-82-67
Курск +7 (4712) 23-80-45
Липецк +7 (4742) 20-01-75
Магнитогорск +7 (3519) 51-02-81
Москва +7 (499) 404-24-72
Мурманск +7 (8152) 65-52-70
Наб.Челны +7 (8552) 91-01-32
Ниж.Новгород +7 (831) 200-34-65
Новосибирск +7 (383) 235-95-48
Омск +7 (381) 299-16-70
Орел +7 (4862) 22-23-86
Оренбург +7 (3532) 48-64-35
Пенза +7 (8412) 23-52-98
Пермь +7 (342) 233-81-65
Ростов-на-Дону +7 (863) 309-14-65
Рязань +7 (4912) 77-61-95
Самара +7 (846) 219-28-25
Санкт-Петербург +7 (812) 660-57-09
Саратов +7 (845) 239-86-35
Сочи +7 (862) 279-22-65
Ставрополь +7 (8652) 57-76-63
Сургут +7 (3462) 77-96-35
Тверь +7 (4822) 39-50-56
Томск +7 (3822) 48-95-05
Тула +7 (4872) 44-05-30
Тюмень +7 (3452) 56-94-75
Ульяновск +7 (8422) 42-51-95
Уфа +7 (347) 258-82-65
Хабаровск +7 (421) 292-95-69
Челябинск +7 (351) 277-89-65
Ярославль +7 (4852) 67-02-35

сайт: burkert.pro-solution.ru| эл. почта: btk@pro-solution.ru
телефон: 8 800 511 88 70

Circuit function

A 2/2 way direct-acting solenoid valve, normally closed

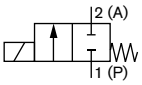

B 2/2 way direct-acting solenoid valve, normally open

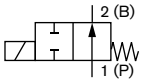

C 3/2 way direct-acting solenoid valve, normally closed

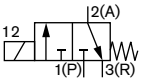

D 3/2 way direct-acting solenoid valve, normally open

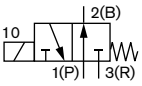

E 3/2 way mixing solenoid valve

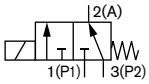

F 3/2 way direct-acting, distribution solenoid valve

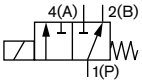

T 3/2 way direct-acting solenoid valve, flow direction optional

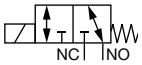

Technical data (continued)

Electrical connection	Pin terminal acc. to DIN EN 175301-803 Form A for cable pug Type 2508/2509 (also on request with moulded cable or terminal box)
Protection class	IP65 with Cable Plug
Coil insulation class	H
Installation	As required, preferably with actuator upright
Weight [kg]	
with metal body	0.47
with plastic housing	0.40

Standard power consumption

Frequency AC Inrush [VA]	Hold [VA]	Operation [W]	Frequency DC Cold [W]	Warm [W]
30	15	8	11	8

Impulse (inrush winding)

Frequency AC Hold [VA]	Operation [W]	Frequency DC Cold [W]	Warm [W]
20	11	11	8

Response times

Orifice [mm]	Frequency AC Opening [ms]	Closing [ms]	Frequency DC Opening [ms]	Closing [ms]
2-4	8-15	8-15	10-20	10-20

Response times [ms]:

Measured at valve outlet at 6 bar and +20 °C
Opening: Pressure rise 0 to 90 %,
Closing: Pressure drop 100 to 10 %

Pressure range and flow rate for metal body

Circuit function	DN	K_V value water [m^3/h]: DC	AC [50 or 60 Hz]	Standard[1] Pressure range[4] [bar]	Vacuum[3] Pressure range[4] [bar]	Impulse[2] Pressure range[4] [bar]
A / B / C / D / F	2.0	0.08	0.11	0-16 [5]	-0.98-10	0-16 [5]
	3.0	0.14	0.18	0-10	-0.98-6	0-10
	4.0	0.17	0.23	0-5	-0.98-3	0-5
	5.0	0.29	0.29	0-2.5	-0.98-1	0-2.5
E	2.0	0.08	0.11	0-10	-0.98-8	0-10
	3.0	0.14	0.18	0-6	-0.98-5	0-6
	4.0	0.17	0.23	0-3	-0.98-2.5	0-3
	5.0	0.29	0.29	0-1.5	-0.98-1	0-1
T	2.0	0.08	0.11	0-12	-0.98-8	0-10
	3.0	0.14	0.18	0-8	-0.98-5	0-6
	4.0	0.17	0.23	0-4	-0.98-2.5	0-5
	5.0	0.29	0.29	0-2.5	-0.98-1	-

Pressure range and flow rate for plastic body

Circuit function	DN	K_V value water [m^3/h][6]	Standard[1] Pressure range[4] [bar] AC [50 or 60 Hz]	Pressure range[4] [bar] DC	Vacuum Pressure range[4] [bar]	Impulse[2] Pressure range[4] [bar]
A / B / C / D / F	2.0	0.13	0-16 [5]	0-12	-0.98-10	0-12
	3.0	0.25	0-10	0-8	-0.98-6	0-8
	4.0	0.30	0-5	0-4	-0.98-3	0-4
	5.0	0.40	0-4.5	0-3	-0.98-1	0-3
E / T	2.0	0.13	0-10	0-7	-0.98-7	0-7
	3.0	0.25	0-6	0-4	-0.98-5	0-4
	4.0	0.30	0-3	0-2	-0.98-2.5	0-2

[1] Rated power consumption 8 W
[2] Inrush power 11 W
[3] Vacuum possible for all seal materials
[4] Pressure values [bar] with respect to atmospheric pressure
[5] For seal material FKM and FFKM the max. mediums pressure is 12 bar
[6] At frequency DC the K_V value is reduced till 10 % to fulfil the function

Other circuit functions

The valves are fitted with different springs for a specific circuit function. When used in other circuit functions the permissable operating pressure changes acc. to the following table.

Metal body (8 W respectively 11 W)																		
Circuit function	Max. operating pressure [bar] when using the valve in a new circuit function																	
	Orifice 2 mm						Orifice 3 mm						Orifice 4 mm					
	A[1]	B[1]	C	D	E	F	A	B	C	D	E	F	A	B	C	D	E	F
C	16	1.5	16	1.5	1.5	16	10	1	10	1	1	10	5	0.8	5	0.8	0.8	5
D	4	16	4.5	16	4	4	2.5	10	2.5	10	2	3	2	5	2	5	2	2
T	8	8	10	10	10	8	6	6	6	6	6	6	3	3	3	3	3	3

Plastic body (8 W respectively 11 W)																		
Circuit function	Max. operating pressure [bar] when using the valve in a new circuit function																	
	Orifice 2 mm						Orifice 3 mm						Orifice 4 mm					
	A[1]	B[1]	C	D	E	F	A	B	C	D	E	F	A	B	C	D	E	F
C	16	1.5	16	1.5	1.5	16	10	1	10	1	1	10	5	0.8	5	0.8	0.8	5
D	4	16	4.5	16	4	4	2.5	10	2.5	10	2	3	2	5	2	5	2	2
F	16	1.5	10	1.5	1.5	16	6	1	6	1	1	10	4	1	4	1	1	5

[1] For circuit function A and B the valve must be connected acc. to the pin assignment of 3/2 way valve.

Additional options

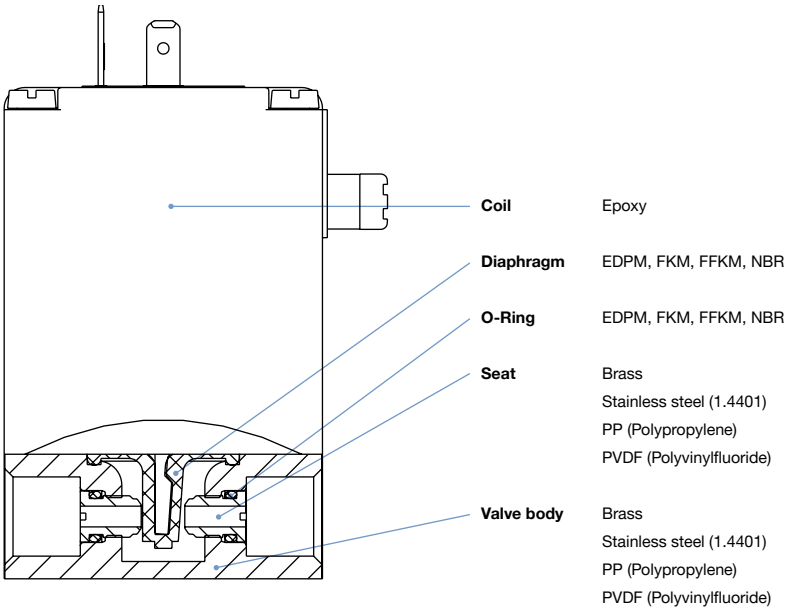

Additional options

Option	Variable Code	Description
Impulse version	CF02	Bistable magnetic system with inrush and drop-off coil; Continuous operation or operation with short current pulses (min. 150 ms) possible
Oxygen versions	NL02	Suitable for applications with oxygen (non-metal materials that are in contact with the medium, are tested and approved according to BAM)
Increased purity requirements e.g. oil, grease and silicone-free	NL50/NL05	Wetted parts are specially cleaned and packaged in accordance with the valves
Increased tightness requirements	PCxx	Standard units are tested at 10^{-2} mbar x l / sec; feasible up to 10^{6} mbar
Electrical feedback	LF02 / LF03	See Type 1060
High-power electronics	CZ05	Inrush power 60 W, nominal holding current 3 W; with plastic versions 100 % ED is now feasible
Vacuum version	NA02	Suitable for vacuums up to -0.98 bar
Increased purity and tightness requirements	NA03	Wetted parts are specially cleaned and leak tested to 10^{-4} mbar x l/sec
Increased purity and tightness requirements and vacuum version	NA01	Wetted parts are specially cleaned and leak tested up to 10^{-4} mbar x l/sec and suited for vacuum up to -0.98 bar
Coil with reduced power (5 W)		Devices have lower pressure range; with plastic versions 100 % ED is now feasible
Cable plug	JFxx / JGxx	Cable plug is included in delivery. Cable plug versions (acc. to DIN EN 175301-803 Form A), see datasheet Type 2508 and 2509
Approvals	PD01	CSA General Purpose valve
	PD02	CSA General Purpose valve UL recognized General Purpose valve
	PD24	UL listed General Purpose valve CSA General Purpose valve FM non-incendive for class I / II / III Div.2 T4
	PD45	FM explosionproof for class I Div. 1 and dust-ingnitionproof for class II / III Div. 1 T4 CSA General Purpose valve for hazardous location class I / II Div. 2 and class III T4
	PD07	DNV-GL (formerly Germanischer Lloyd)
possible conformities (depending on the assembly)		EAC, drinking water, FDA

Dimensions [mm]

Metal body

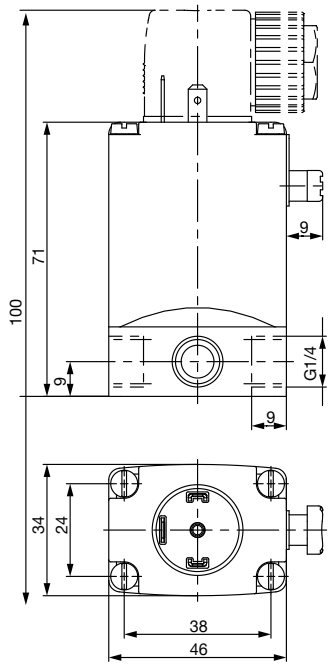

Plastic body

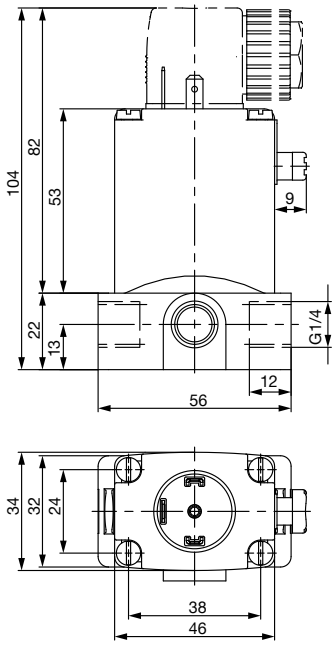

- For metal housings, the minimum thread length at the middle connection is 7.5 mm
- Mounting device: By drilling M4 × 8 (metal housing) or self-tapping screws (plastic housing) on underside of the housing on the hole pattern 38 × 24.

Port connections

The connections marked with 1, 2 and 3 are labelled in the drawing according to the circuit function table.

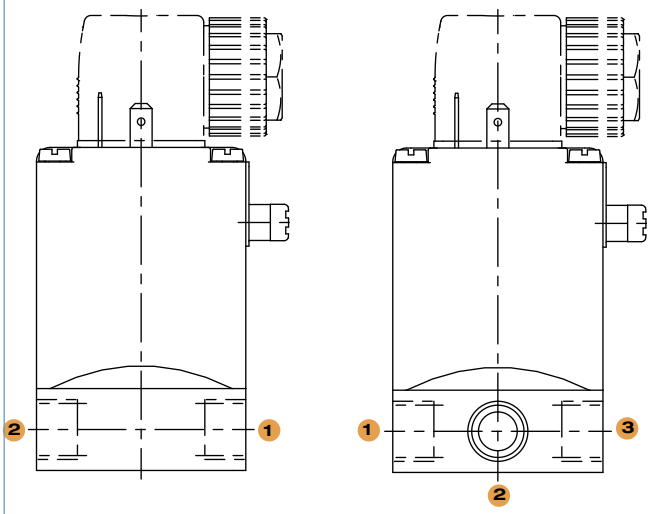

Circuit function	Connection 1	Connection 2	Connection 3
A	P	A	
B	B	P	
C	P	A	R
D	R	B	P
E	P1	A	P2
F	A	P	B
T	NC	In/Out	NO

Ordering chart (products with reduced delivery time)

All devices with connection thread G ¼, manual override and cable plug Type 2508

Circuit function	Orifice [mm]	Seal Material	Housing or seat material	Article no. per voltage/frequency [V/Hz]		
				024/DC	024/50	230/50
A[2]	3.0	FKM	Brass	020293	022883	124909
	3.0	FKM	Stainless steel	020292	023984	024563
	3.0	FKM	PP	018410	088496	045653
	3.0	FKM	PVDF	018188	020286	069006
	3.0	NBR	Brass	020294	086553	024902
	3.0	EPDM	PP	067214	022105	062398
	4.0	FKM	Brass	024019	025246	124912
	4.0	FKM	Stainless steel	018276	018857	020873
	4.0	FKM	PP	062695	043005	063116
	4.0	FKM	PVDF	023472	069079	087837
	4.0	NBR	Brass	025084	-	046007
	4.0	EPDM	PP	021660	067731	063118
	4.0	EPDM	PVDF	057573	-	125507
	5.0	FKM	PP	062624	067007	022619
	5.0	FKM	PVDF	064512	-	063786
	5.0	EPDM	PP	061321	054261	049969
	5.0	EPDM	PVDF	120184	059802	130117
B[2]	3.0	FKM	Brass	141917	130146	141919
	4.0	FKM	Brass	141920	141921	141923
	3.0	FKM	Stainless steel	141928	141929	141931
	4.0	FKM	Stainless steel	141932	141933	141935
C	2.0	NBR	Brass	041103	042129	041105
	3.0	NBR	Brass	041107	041108	041116
	3.0	FKM	Stainless steel	052344	045024	052059
	4.0	NBR	Brass	042218	042695	042329
	4.0	FKM	Stainless steel	050483	043324	050979
	4.0	FKM	PP	-	088420	-
	4.0	FKM	PVDF	055788	-	019078
	4.0	EPDM	PP	-	-	063625
D	2.0	NBR	Brass	056984	041858	041137
	3.0	NBR	Brass	041139	041141	041147
	4.0	NBR	Brass	043129	042696	042903
E	3.0	FKM	PP	069917	066230	022294
	3.0	EPDM	PP	078556	-	078559
	4.0	FKM	PP	061077	086921	053406
	4.0	FKM	PVDF	022340	020550	085599
	4.0	EPDM	PP	067160	044693	066033
F	4.0	FKM	PP	020528	-	-
	4.0	EPDM	PP	-	-	066032
T	2.0	FKM	Brass	124922	138316	124925
	3.0	FKM	Brass	124927	124928	124930
	2.0	FKM	Stainless steel	124932	124933	124935
	3.0	FKM	Stainless steel	124937	124938	124940

[2] The listed ID numbers and circuit functions have a body with a straight channel

Note: Further versions on request

Order chart for accessories

Description	Article no.
Mounting plate cpl. for DIN rail mounting	013253

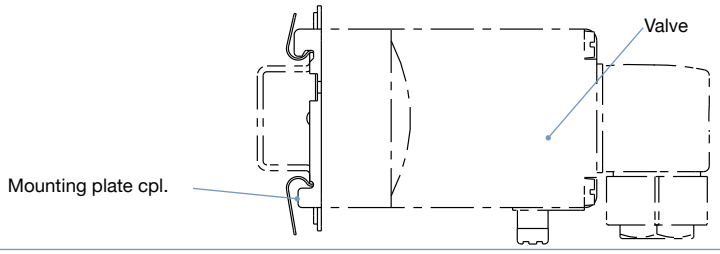

Explosion proof version

Technical data	
Available body materials	Brass, stainless steel (1.4401), PP (Polypropylene) PVDF (Polyvinylfluoride)
Port connection	G ¼; NPT ¼; (RC ¼ and G ⅛ on request)
Seal material	EDPM / FKM / FFKM / NBR
Medium	
for NBR	Neutral medium such as compressed air, town gas, water, hydraulic oil, oils and fats without additives, oxygen
for EPDM	Alkalis, acids to medium concentrations, alkaline washing and bleaching lyes
for FKM	Oxydizing acids and substances, hot oils with additives, salt solutions, waste gases, oxygen
for FFKM	Aggressive mediums, hot air, hot oils
All Materials - For more exact info. please refer to our chemical resistance chart	
Medium temperature for body material brass or stainless steel	NBR 0 to +80 °C EPDM -30 to +90 °C FKM 0 to +90 °C FFKM +5 to 90 °C
Medium temperature for body material PP or PVDF	NBR 0 to +80 °C EPDM -30 to +80 °C FKM 0 to +80 °C FFKM +5 to +80 °C
Viscosity	Max. 37 mm^2/s
Ambient temperature.	Max. +55 °C
Voltages	24 V, 230 V (further voltages on request)
Frequency	AC/DC
Voltage tolerance	±10 %
Duty cycle	100 %
Electrical connection	Moulded cable (For more detailed information, refer to the instruction manual ACP016, chapter 7.6.1) Terminal box without safety fuse
Protection class	IP65
Coil insulation class	H
Type of protection	II 2 G Ex mb IIC T4 Gb II 2 D EX mb IIIC T130° Db
Certificate	EPS 16 ATEX 1 111 X IECEx EPS 16.0049X
Installation	As required, preferably with actuator upright

Circuit function

A 2/2 way direct-acting solenoid valve, normally closed

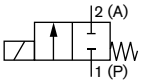

B 2/2 way direct-acting solenoid valve, normally open

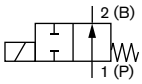

C 3/2 way direct-acting solenoid valve, normally closed

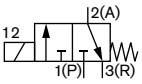

D 3/2 way direct-acting solenoid valve, normally open

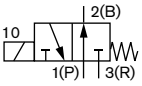

E 3/2 way mixing solenoid valve

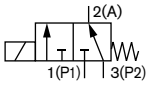

F 3/2 way direct-acting, distribution solenoid valve

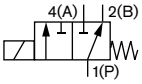

T 3/2 way direct-acting solenoid valve, flow direction optional

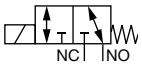

Cycling rate

	Max. cycling rate	For mediums temp	For ambient temp.
Variant 1	20/min	Up to +70 °C	Up to +40 °C
Variant 2	5/min	Up to +90 °C	Up to +40 °C

Power consumption

Inrush [W]	Operation [W]
40	3

Response times

Orifice [mm]	Opening [ms]	Closing [ms]
2-4	30	40

Response times [ms]:
Measured at valve outlet at 6 bar and +20 °C
Opening: Pressure rise 0 to 90 %,
Closing: Pressure drop 100 to 10 %

Technical data (continued)

Pressure range and flow rate for metal body

Circuit function	DN	K_V value water [m³/h]	Standard Pressure range[2) 3)] [bar]	Vacuum Pressure range [bar]
A / B / C / D / F	2.0	0.11	0-16	-0.98 – 10
	3.0	0.18	0-10	-0.98 – 6
	4.0	0.23	0 – 5	-0.98 – 3
	5.0	0.29	0 – 4	-0.98 – 2.5
E	2.0	0.11	0 – 10	-0.98 – 8
	3.0	0.18	0 – 6	-0.98 – 5
	4.0	0.23	0 – 3.5	-0.98 – 2.5
	5.0	0.29	0 – 3	-0.98 – 2
T	2.0	0.11	0 – 10	-0.98 – 8
	3.0	0.18	0 – 6	-0.98 – 5

Pressure range and flow rate for plastic body

Circuit function	DN	K_V value water [m³/h]	Standard Pressure range[2) 3)] [bar]	Vacuum Pressure range [bar]
A / B / C / D / F	2.0	0.13	0-16	-0.98 – 10
	3.0	0.25	0 – 10	-0.98 – 6
	4.0	0.30	0 – 5	-0.98 – 3
	5.0	0.40	0 – 4.5	-0.98 – 1
E / T	2.0	0.13	0-10	-0.98 – 7
	3.0	0.25	0 – 6	-0.98 – 5
	4.0	0.30	0 – 3	-0.98 – 2.5

[1)] Measured at +20 °C, 1 bar[2)] pressure at valve inlet and free outlet.
[2)] Devices with FKM or FFKM diaphragm are reduced to a max. pressure of 12 bar
[3)] Pressure data [bar]: Measured as overpressure to the atmospheric pressure

Other circuit functions

The valves are fitted with different springs for a specific circuit function. When used in other circuit functions the permissible operating pressure changes acc. to the following table.

Metal body																		
Valve operation	Max. operating pressure [bar] when using the valve in a new circuit function																	
	Orifice 2 mm						Orifice 3 mm						Orifice 4 mm					
	A1)	B[1)]	C	D	E	F	A	B	C	D	E	F	A	B	C	D	E	F
C	16	1.5	16	1.5	1.5	16	10	1	10	1	1	10	5	0.8	5	0.8	0.8	5
D	4	16	4.5	16	4	4	2.5	10	2.5	10	2	3	2	5	2	5	2	2
T	8	8	10	10	10	8	6	6	6	6	6	6	3	3	3	3	3	3

Plastic body																		
Valve operation	Max. operating pressure [bar] when using the valve in a new circuit function																	
	Orifice 2 mm						Orifice 3 mm						Orifice 4 mm					
	A[1)]	B[1)]	C	D	E	F	A	B	C	D	E	F	A	B	C	D	E	F
C	16	1.5	16	1.5	1.5	16	10	1	10	1	1	10	5	0.8	5	0.8	0.8	5
D	4	16	4.5	16	4	4	2.5	10	2.5	10	2	3	2	5	2	5	2	2
F	16	1.5	10	1.5	1.5	16	6	1	6	1	1	10	4	1	4	1	1	

[1)] For circuit function A and B the valve must be connected acc. to the pin assignment of 3/2 way valve.

Additional options

Option	Variable Code	Description
Oxygen versions	NL02	Suitable for applications with oxygen (non-metal materials that are in contact with the medium, are tested and approved according to BAM)
Increased purity requirements e.g. oil, grease and silicone-free	NL50/NL05	Wetted parts are specially cleaned and packaged in accordance with the valves
Increased hermetic requirements	PCxx	Standard units are tested at 10^{-2} mbar x l / sec; feasible up to 10^{-6} mbar
Vacuum version	NA02	Suitable for vacuums up to -0.98 bar
Increased purity and hermetic requirements	NA03	Wetted parts are specially cleaned and leak tested to 10^{-4} mbar x l/sec
Increased purity and hermetic requirements and vacuum version	NA01	Wetted parts are specially cleaned and leak tested up to 10^{-4} mbar x l/sec and suited for vacuum up to -0.98 bar
Electrical feedback	CF15	Coil with intrinsically safe proximity switches (PTB 00 ATEX 2048X) instead of manual override

Dimensions [mm]

Terminal connection box version

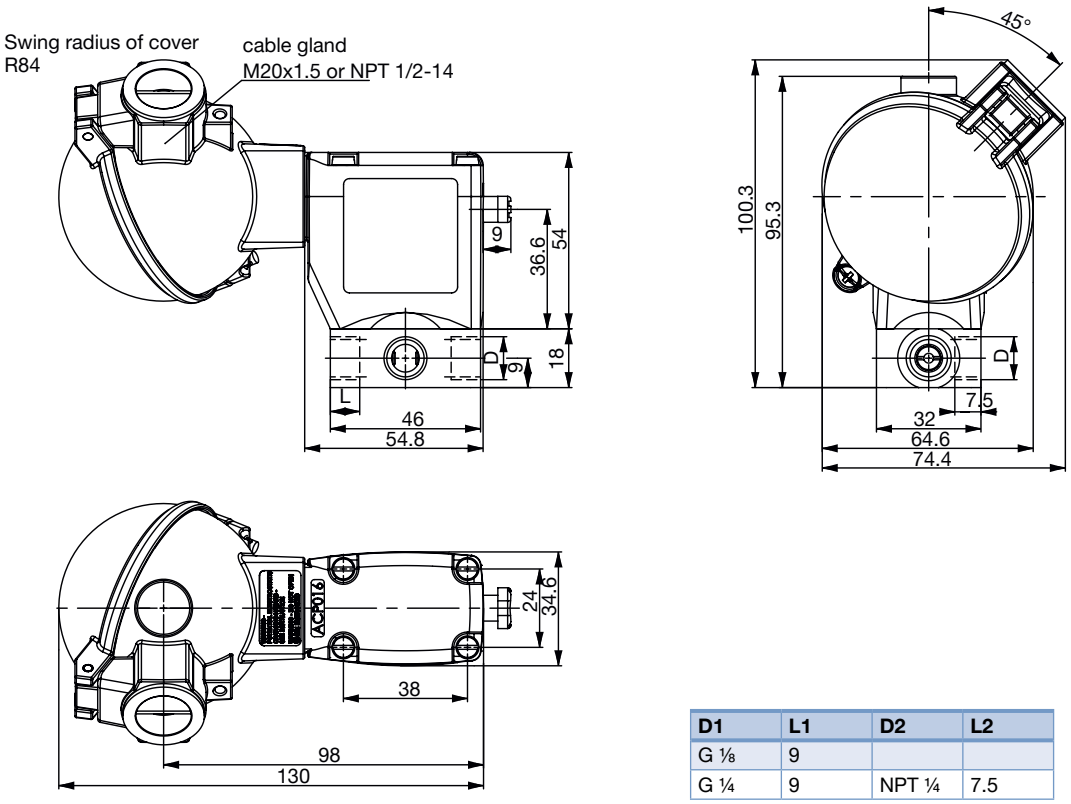

D1	L1	D2	L2
G ⅛	9		
G ¼	9	NPT ¼	7.5

For G threads the dimensions D1 and L1 are valid. For NPT threads the dimensions D2 and L2 are valid

Cable outlet version

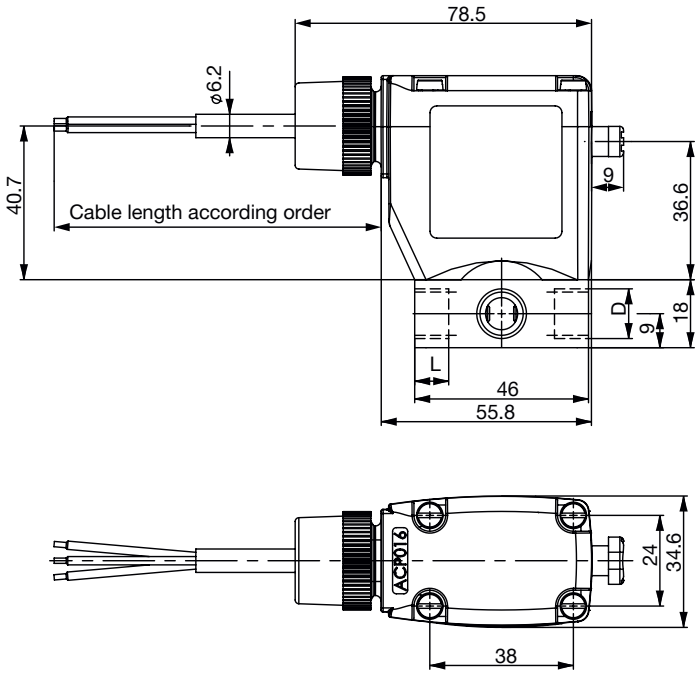

Port connections

The connections marked with 1, 2 and 3 are labelled in the drawing according to the circuit function table on the left.

Circuit function	Connection 1	Connection 2	Connection 3
A	P	A	
B	B	P	
C	P	A	R
D	R	B	P
E	P1	A	P2
F	A	P	B

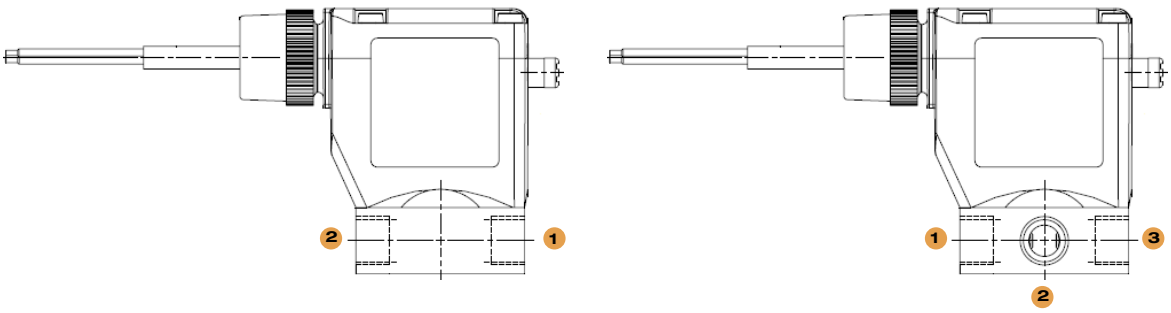

Ordering chart

All devices with connection thread G ¼ and manual override

Circuit function	Orifice [mm]	Seal Material	Housing or seat material	Electrical connection	Article no. per voltage/ frequency [V/Hz]	
					024/UC	230/UC
A[2)]	3.0	NBR	MS	Terminal box	306165	306167
	3.0	NBR	MS	Cable	306005	306006
	3.0	FKM	Stainless steel	Terminal box	306168	306169
	3.0	FKM	Stainless steel	Cable	306007	306008
C	3.0	NBR	MS	Terminal box	304531	306149
	3.0	NBR	MS	Cable	305982	305985
	3.0	FKM	Stainless steel	Terminal box	306154	306164
	3.0	FKM	Stainless steel	Cable	306003	306004
E	3.0	FKM	Stainless steel	Terminal box	306171	306157
	3.0	FKM	Stainless steel	Cable	306009	306010
F	3.0	FKM	Stainless steel	Terminal box	306198	306172
	3.0	FKM	Stainless steel	Cable	306011	306012
	4.0	FKM	Stainless steel	Terminal box	306151	–
	4.0	FKM	Stainless steel	Cable	306050	–

Note: Further versions on request

Ex-Cable glands

polyamide version included in delivery / surcharge applied for brass nickel plated version

Photo	Description	Ex Approvals Certification	Ex Approvals Identification	Article no.	Drawing
	Brass. nickel-plated, 6-13 mm	PTB 04 ATEX 1112 X, IECEx PTB 13.0027X	II 2 G Ex e IIC Gb, II 2 D Ex tb IIIC Db IP68,	773278	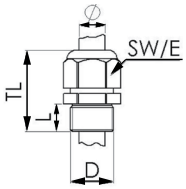 TL 29-37 mm; L 6 mm; D 20; SW 24 mm; E 27 mm
	Polyamide, 7-13 mm	PTB 13 ATEX 1015 X, IECEx PTB 13.0034X	II 2 G Ex e IIC Gb, II 2 D Ex tb IIIC Db IP68	773277	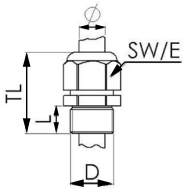 TL 36-45 mm; L 10 mm; D 20; SW 24 mm; E 28 mm

Special tool to turn the junction box (not included in delivery)

Photo	Description	Article no.
	Set SC02-AC10 Special wrench Service Manual	293488

По вопросам продаж и поддержки обращайтесь:

Архангельск +7 (8182) 45-71-35
Астрахань +7 (8512) 99-46-80
Барнаул +7 (3852) 37-96-76
Белгород +7 (4722) 20-58-80
Брянск +7 (4832) 32-17-25
Владивосток +7 (4232) 49-26-85
Волгоград +7 (8442) 45-94-42
Екатеринбург +7 (343) 302-14-75
Ижевск +7 (3412) 20-90-75
Казань +7 (843) 207-19-05
Калуга +7 (4842) 33-35-03
Кемерово +7 (3842) 21-56-70
Киров +7 (8332) 20-58-70
Краснодар +7 (861) 238-86-59
Красноярск +7 (391) 989-82-67
Курск +7 (4712) 23-80-45
Липецк +7 (4742) 20-01-75
Магнитогорск +7 (3519) 51-02-81
Москва +7 (499) 404-24-72
Мурманск +7 (8152) 65-52-70
Наб.Челны +7 (8552) 91-01-32
Ниж.Новгород +7 (831) 200-34-65
Новосибирск +7 (383) 235-95-48
Омск +7 (381) 299-16-70
Орел +7 (4862) 22-23-86
Оренбург +7 (3532) 48-64-35
Пенза +7 (8412) 23-52-98
Пермь +7 (342) 233-81-65
Ростов-на-Дону +7 (863) 309-14-65
Рязань +7 (4912) 77-61-95
Самара +7 (846) 219-28-25
Санкт-Петербург +7 (812) 660-57-09
Саратов +7 (845) 239-86-35
Сочи +7 (862) 279-22-65
Ставрополь +7 (8652) 57-76-63
Сургут +7 (3462) 77-96-35
Тверь +7 (4822) 39-50-56
Томск +7 (3822) 48-95-05
Тула +7 (4872) 44-05-30
Тюмень +7 (3452) 56-94-75
Ульяновск +7 (8422) 42-51-95
Уфа +7 (347) 258-82-65
Хабаровск +7 (421) 292-95-69
Челябинск +7 (351) 277-89-65
Ярославль +7 (4852) 67-02-35

сайт: burkert.pro-solution.ru| эл. почта: btk@pro-solution.ru
телефон: 8 800 511 88 70