bürkert
FLUID CONTROL SYSTEMS

Type 6213 EV, 6281 EV

2/2-way solenoid valve

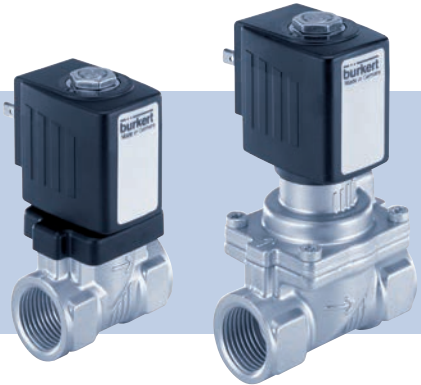

Operating Instructions

По вопросам продаж и поддержки обращайтесь:

Архангельск +7 (8182) 45-71-35
Астрахань +7 (8512) 99-46-80
Барнаул +7 (3852) 37-96-76
Белгород +7 (4722) 20-58-80
Брянск +7 (4832) 32-17-25
Владивосток +7 (4232) 49-26-85
Волгоград +7 (8442) 45-94-42
Екатеринбург +7 (343) 302-14-75
Ижевск +7 (3412) 20-90-75
Казань +7 (843) 207-19-05
Калуга +7 (4842) 33-35-03
Кемерово +7 (3842) 21-56-70
Киров +7 (8332) 20-58-70
Краснодар +7 (861) 238-86-59
Красноярск +7 (391) 989-82-67
Курск +7 (4712) 23-80-45
Липецк +7 (4742) 20-01-75
Магнитогорск +7 (3519) 51-02-81
Москва +7 (499) 404-24-72
Мурманск +7 (8152) 65-52-70
Наб.Челны +7 (8552) 91-01-32
Ниж.Новгород +7 (831) 200-34-65
Новосибирск +7 (383) 235-95-48
Омск +7 (381) 299-16-70
Орел +7 (4862) 22-23-86
Оренбург +7 (3532) 48-64-35
Пенза +7 (8412) 23-52-98
Пермь +7 (342) 233-81-65
Ростов-на-Дону +7 (863) 309-14-65
Рязань +7 (4912) 77-61-95
Самара +7 (846) 219-28-25
Санкт-Петербург +7 (812) 660-57-09
Саратов +7 (845) 239-86-35
Сочи +7 (862) 279-22-65
Ставрополь +7 (8652) 57-76-63
Сургут +7 (3462) 77-96-35
Тверь +7 (4822) 39-50-56
Томск +7 (3822) 48-95-05
Тула +7 (4872) 44-05-30
Тюмень +7 (3452) 56-94-75
Ульяновск +7 (8422) 42-51-95
Уфа +7 (347) 258-82-65
Хабаровск +7 (421) 292-95-69
Челябинск +7 (351) 277-89-65
Ярославль +7 (4852) 67-02-35

сайт: burkert.pro-solution.ru | эл. почта: btk@pro-solution.ru
телефон: 8 800 511 88 70

1 OPERATING INSTRUCTIONS

The operating instructions contain important information.

- Read the operating instructions carefully and follow the safety instructions in particular, and also observe the operating conditions.
- Operating instructions must be available to each user.
- The liability and warranty for the device are void if the operating instructions are not followed.

1.1 Symbols

▸ designates an instruction to prevent risks.

→ designates a procedure which you must carry out.

Warning of injuries:

⚠ **DANGER!**
Imminent danger. Serious or fatal injuries.

⚠ **WARNING!**
Potential danger. Serious or fatal injuries.

⚠ **CAUTION!**
Danger. Minor or moderately severe injuries.

Warns of damage to property:
NOTE!

2 INTENDED USE

Incorrect use of the solenoid valve can be dangerous to people, nearby equipment and the environment.

- The device type 6213 EV / 6281 EV is designed to control, shut off and meter neutral media up to a viscosity of 21 mm^2/s.
- Provided the cable plug is connected and installed correctly, e.g. Bürkert Type 2508, the device satisfies protection class IP65 in accordance with DIN EN 60529 / IEC 60529.
- Use according to the permitted data, operating conditions and conditions of use specified in the contract documents and operating instructions.
- In the case of explosion-proof devices (see rating plate or additional plate) also follow the operating instructions for the coil / pilot control.
- Correct transportation, correct storage and installation and careful use and maintenance are essential for reliable and problem-free operation.
- Use the device only as intended.

2.1 Definition of term

In these operating instructions, the term “device” always refers to the Type 6213 EV / 6281 EV.

3 BASIC SAFETY INSTRUCTIONS

These safety instructions do not make allowance for any

- contingencies and events which may arise during the installation, operation and maintenance of the devices.
- local safety regulations - the operator is responsible for observing these regulations, also with reference to the installation personnel.

Danger - high pressure.

- Before loosening the pipes and valves, turn off the pressure and vent the pipes.

Risk of electric shock.

- Before reaching into the device or the equipment, switch off the power supply and secure to prevent reactivation.
- Observe applicable accident prevention and safety regulations for electrical equipment.

Risk of burns/risk of fire if used for a prolonged switch-on time through hot device surface.

- Keep the device away from highly flammable substances and media and do not touch with bare hands.

Risk of injury due to malfunction of valves with alternating current (AC).

Sticking core causes coil to overheat, resulting in a malfunction.

- Monitor process to ensure function is in perfect working order.

Risk of short-circuit/escape of media through leaking screw joints.

- Ensure seals are seated correctly.
- Carefully screw valve and pipelines together.

To prevent injury, ensure that:

- Do not make any external modifications to the housing of the device. Ensure that the system cannot be activated unintentionally.
- Installation and repair work may be carried out by authorized technicians only and with the appropriate tools.
- After an interruption in the power supply or fluidic supply, ensure that the process is restarted in a defined or controlled manner.
- Do not put any loads on the body.
- The general rules of technology apply to application planning and operation of the device.

4 TECHNICAL DATA

4.1 Operating conditions

The following values are indicated on the type label:

- Voltage (Tolerance ± 10 %) / Current type
- Coil power consumption
  (active power in W - at operating temperature)
- Operating pressure
- Body material: Brass (MS), Stainless steel (VA)
- Seal material: FKM, EPDM, NBR

Circuit function:		
A (NC)	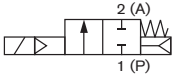	2/2-way valve, normally closed
A (NC)	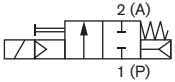	2/2-way valve, normally closed, with manual override
B (NO)	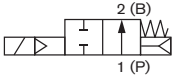	2/2-way valve, normally open

Protection class: IP65 with accordance with DIN EN 60529 / IEC 60529 with cable plug, e. g. Bürkert Type 2508

Special instructions for valves circuit function B (NO) with deaeration connection G1/8 on the coil (CF05/MX62):

The deenergized valve is open. The medium also flows off via the deaeration connection on the coil.

Valves of this design are therefore suitable for relieving compressors only.

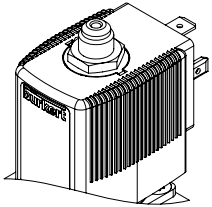

4.2 Application conditions

Ambient temperature: max. +55 °C

Operating duration: Unless otherwise indicated on the type label, the solenoid system is suitable for continuous operation

Important information for functional reliability during continuous operation.
If standstill for a long period at least 1-2 activations per day are recommended.

Service life: High switching frequency and high pressures reduce the service life

Permitted medium temperature depending on coil and seal material:

Coil body PA/EP[1)]	Seal material	Medium temperature
Polyamide PA	FKM	0...+90 °C
Epoxy EP (NA38)	FKM	0...+120 °C
Polyamide PA	EPDM	-30...+90 °C
Epoxy EP (NA38)	EPDM	-30...+100 °C
Polyamide PA	NBR	-10...+80 °C

1) *Marking PA and EP under electric connection*

Permitted media depending on seal material:

Seal material	Permitted media[2)]
FKM	Per-solutions, hot oils without additives, diesel and heating oil without additives, detergent solution
EPDM	Oil and grease-free liquids, cold and warm water
NBR	Cold and warm water

2) *Gaseous media at low differential pressures (e.g. compressed air and vacuum) can also be actuated in consideration (or due to restriction) of a lower tightness. We recommend prior clarification with our sales office regarding the possible application*

The following values must also be observed for valves with UL/UR approval:		
	Medium temperature	Ambient temperature
Non-hazardous fluids (air and inert gas)	-30...+120 °C -30...+100 °C (for 6213 DN40)	-30...+55 °C
Water	0...+100 °C	0...+55 °C
Fire protection service valve (PE48)	+5...+90 °C	+5...+55 °C

4.3 Conformity

In accordance with the EU Declaration of conformity, the solenoid valve Type 6213 EV / 6281 EV is compliant with the EU Directives (if applicable).

4.4 Standards

The applied standards, which verify conformity with the EU Directives, can be found on the EU Type Examination Certificate and / or the EU Declaration of Conformity (if applicable).

4.5 Type label (Example)

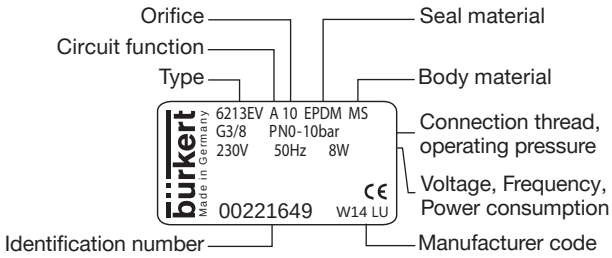

5 INSTALLATION

5.1 Safety instructions

DANGER!

Risk of injury from high pressure in the equipment.

- Before loosening the pipes and valves, turn off the pressure and vent the pipes.

Risk of injury due to electrical shock.

- Before reaching into the system, switch off the power supply and secure to prevent reactivation.
- Observe applicable accident prevention and safety regulations for electrical equipment.

WARNING!

Risk of injury from improper installation.

- Installation may be carried out by authorized technicians only and with the appropriate tools.

Risk of injury from unintentional activation of the system and an uncontrolled restart.

- Secure system from unintentional activation.
- Following installation, ensure a controlled restart.

5.2 Before installation

Installation position: any, actuator preferably upwards.

Procedure:

→ Check pipelines for dirt and clean.

→ Install a dirt filter before the valve inlet (≤ 500 µm).

5.3 Installation

NOTE!

Caution risk of breakage.

- Do not use the coil as a lifting arm.

→ Hold the device with a open-end wrench on the body and screw into the pipeline.

→ Observe direction of flow:
The arrow on the body indicates the direction of flow.

5.4 Manual override (optional Type 6281, Code HA15/HA17)

To control the valve manually, the hand lever under the coil must be turned into the vertical position.

NOTE!

Caution.

- Do not overturn hand lever.
- When the hand lever is actuated, the valve can no longer be switched electrically.

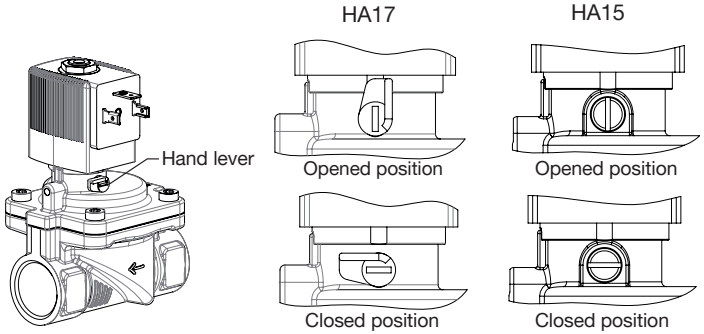

5.5 Electrical connection of the cable plug

WARNING!

Risk of injury due to electrical shock.

- Before reaching into the system, switch off the power supply and secure to prevent reactivation.
- Observe applicable accident prevention and safety regulations for electrical equipment.

If the protective conductor contact between the coil and body is missing, there is danger of electrical shock.

- Always connect protective conductor.
- Check electrical continuity between coil and body.

Procedure:

→ Tighten cable plug (for permitted types see data sheet), observing max. torque 1 Nm.

→ Check that seal is fitted correctly.

→ Connect protective conductor and check electrical continuity between coil and body.

Note the voltage and current type as specified on the type label.

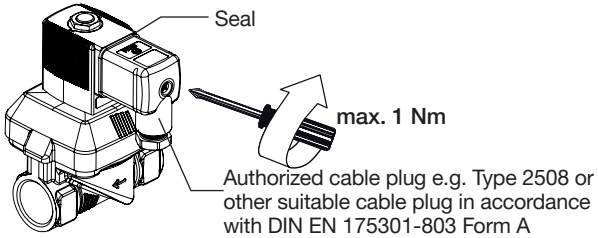

Pulse version (optional, Code CF 16):

- Valve opens when current pulse min. 50 ms: – on Pin 1, + on Pin 2
- Valve closes when current pulse min. 50 ms: + on Pin 1, – on Pin 2

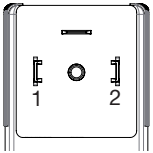

6 MAINTENANCE, TROUBLESHOOTING

6.1 Safety instructions

WARNING!

Risk of injury from improper maintenance.

- Maintenance may be carried out by authorized technicians only and with the appropriate tools.

Risk of injury from unintentional activation of the system and an uncontrolled restart.

- Secure system from unintentional activation.
- Following maintenance, ensure a controlled restart.

6.2 Installation of the coil

WARNING!

Risk of injury due to electrical shock.

- Before reaching into the system, switch off the power supply and secure to prevent reactivation.
- During installation ensure that the coil is situated firmly on the body cover so that the protective conductor connection of the coil is connected to the valve body.
- Check protective conductor contact after installing the coil.

Escaping medium.
When a sticking nut is loosened, medium may escape.
▸ Do not tighten sticking nut any further.

Overheating, risk of fire.
Connection of the coil without pre-assembled valve will result in overheating and destroy the coil.
▸ Connect the coil with pre-assembled valve only.

Procedure:

→ Connect coil body to the core guide pipe.

→ Screw on coil with nut. Observe torque.

NOTE!

Device will be damaged if the wrong tools are used.
Always use a wrench to tighten nut. If other tools are used (e.g. pliers), the device may be damaged.

→ Check protective conductor.

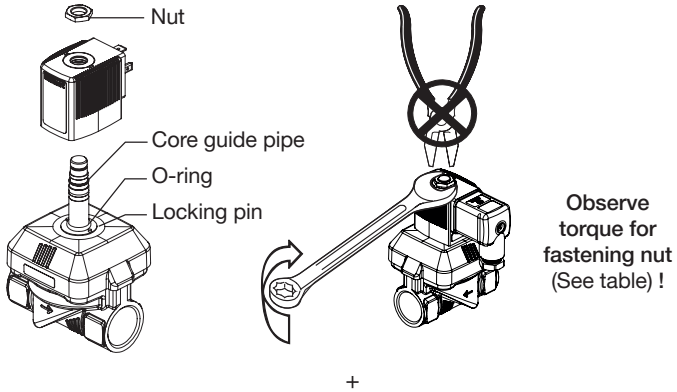

Torque for fastening nut:

Coil type	Coil width	Torque
AC10	32 mm resp. 40 mm	5 Nm
AC19	42 mm	10 Nm

6.3 Malfunctions

If malfunctions occur, check whether:

→ the device has been installed according to the instructions,
→ the electrical and fluid connections are correct,
→ the device is not damaged,
→ all screws have been tightened,
→ the voltage and pressure have been switched on,
→ the pipelines are clean.

Valve does not switch

Possible cause:

- Short circuit or coil interrupted.
- Core or core area dirty.
- Medium pressure outside the permitted pressure range.

Valve does not close

Possible cause:

- Internal space of the valve is dirty.
- Small control bore in the diaphragm blocked.
- Valve opened by manual control.

7 SPARE PARTS

CAUTION!

Risk of injury and/or damage by the use of incorrect parts.

Incorrect accessories and unsuitable spare parts may cause injuries and damage the device and the surrounding area.

- Use only original accessories and original spare parts from Bürkert.

7.1 Ordering spare parts

Replacement part sets

When ordering replacement part sets, quote the sets SET 1, SET 3 or SET 7 and the identification number of the device.

7.2 Overview of replacement part sets

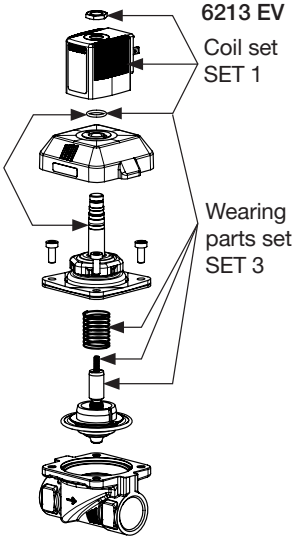

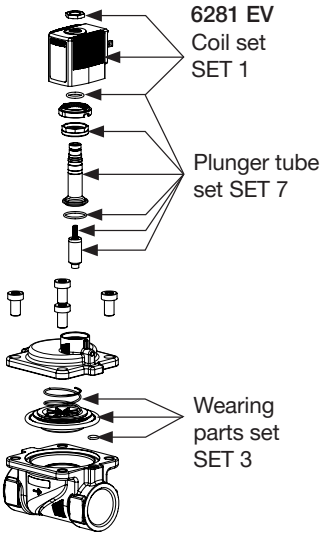

6281 EV (MX62)

Compressor relief valve NO

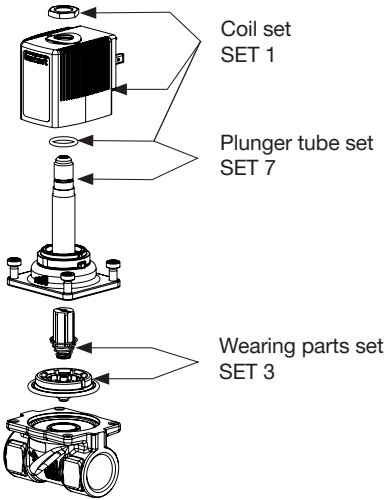

The composition of the spare part sets may differ from the diagram depending on the model of valves.

8 TRANSPORT, STORAGE, DISPOSAL

NOTE!

Transport damages.

Inadequately protected equipment may be damaged during transport.

- During transportation protect the device against wet and dirt in shock-resistant packaging.
- Avoid exceeding or dropping below the allowable storage temperature.

Incorrect storage may damage the device.

- Store the device in a dry and dust-free location.
- Storage temperature: -40...+80 °C.

Damage to the environment caused by device components contaminated with media.

- Observe applicable regulations on disposal and the environment.

→ Dispose of the device and packaging in an environmentally friendly manner.

По вопросам продаж и поддержки обращайтесь:

Архангельск +7 (8182) 45-71-35
Астрахань +7 (8512) 99-46-80
Барнаул +7 (3852) 37-96-76
Белгород +7 (4722) 20-58-80
Брянск +7 (4832) 32-17-25
Владивосток +7 (4232) 49-26-85
Волгоград +7 (8442) 45-94-42
Екатеринбург +7 (343) 302-14-75
Ижевск +7 (3412) 20-90-75
Казань +7 (843) 207-19-05
Калуга +7 (4842) 33-35-03
Кемерово +7 (3842) 21-56-70
Киров +7 (8332) 20-58-70
Краснодар +7 (861) 238-86-59
Красноярск +7 (391) 989-82-67
Курск +7 (4712) 23-80-45
Липецк +7 (4742) 20-01-75
Магнитогорск +7 (3519) 51-02-81
Москва +7 (499) 404-24-72
Мурманск +7 (8152) 65-52-70
Наб.Челны +7 (8552) 91-01-32
Ниж.Новгород +7 (831) 200-34-65
Новосибирск +7 (383) 235-95-48
Омск +7 (381) 299-16-70
Орел +7 (4862) 22-23-86
Оренбург +7 (3532) 48-64-35
Пенза +7 (8412) 23-52-98
Пермь +7 (342) 233-81-65
Ростов-на-Дону +7 (863) 309-14-65
Рязань +7 (4912) 77-61-95
Самара +7 (846) 219-28-25
Санкт-Петербург +7 (812) 660-57-09
Саратов +7 (845) 239-86-35
Сочи +7 (862) 279-22-65
Ставрополь +7 (8652) 57-76-63
Сургут +7 (3462) 77-96-35
Тверь +7 (4822) 39-50-56
Томск +7 (3822) 48-95-05
Тула +7 (4872) 44-05-30
Тюмень +7 (3452) 56-94-75
Ульяновск +7 (8422) 42-51-95
Уфа +7 (347) 258-82-65
Хабаровск +7 (421) 292-95-69
Челябинск +7 (351) 277-89-65
Ярославль +7 (4852) 67-02-35

сайт: burkert.pro-solution.ru | эл. почта: btk@pro-solution.ru
телефон: 8 800 511 88 70